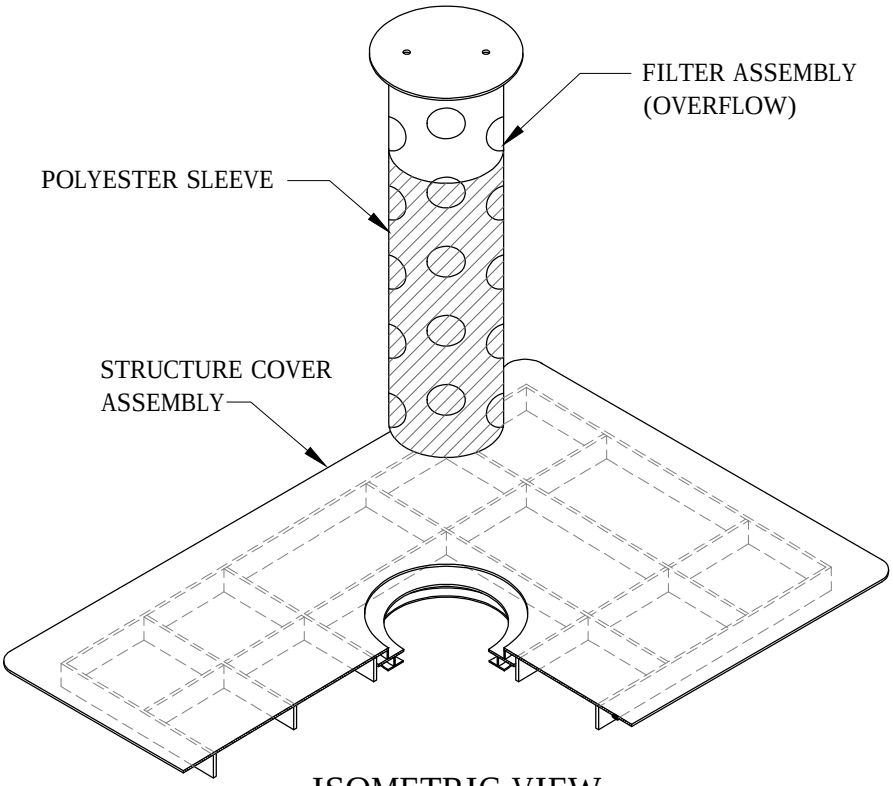

ISOMETRIC VIEW

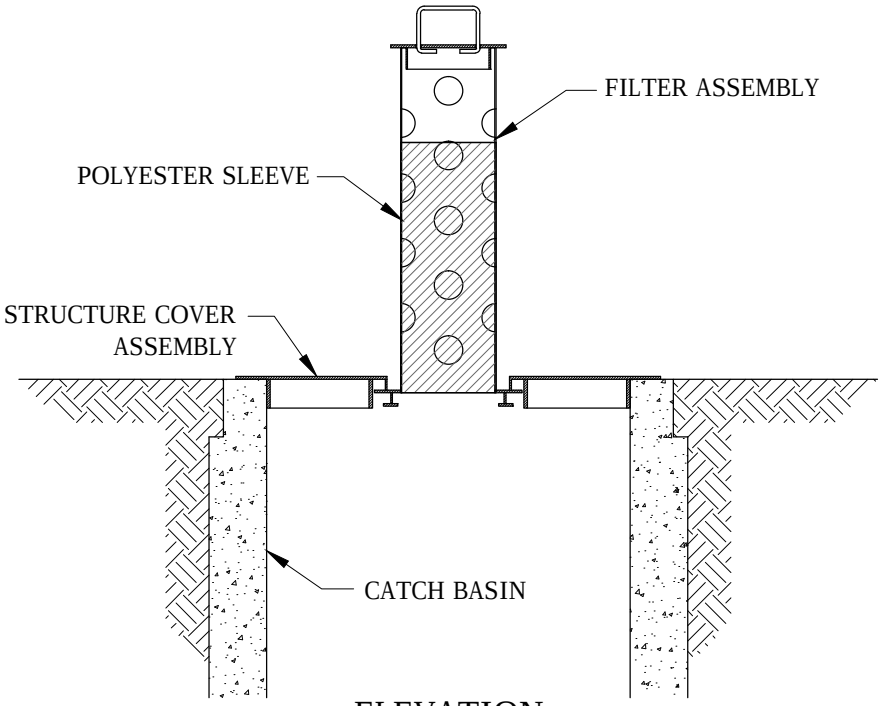

ELEVATION

Apple Valley

INLET PROTECTION, TYPE A
ROAD DRAIN 2x3 TOP SLAB MODEL

LAST REVISION:
JUNE 2009

PLATE NO.
ERO-10

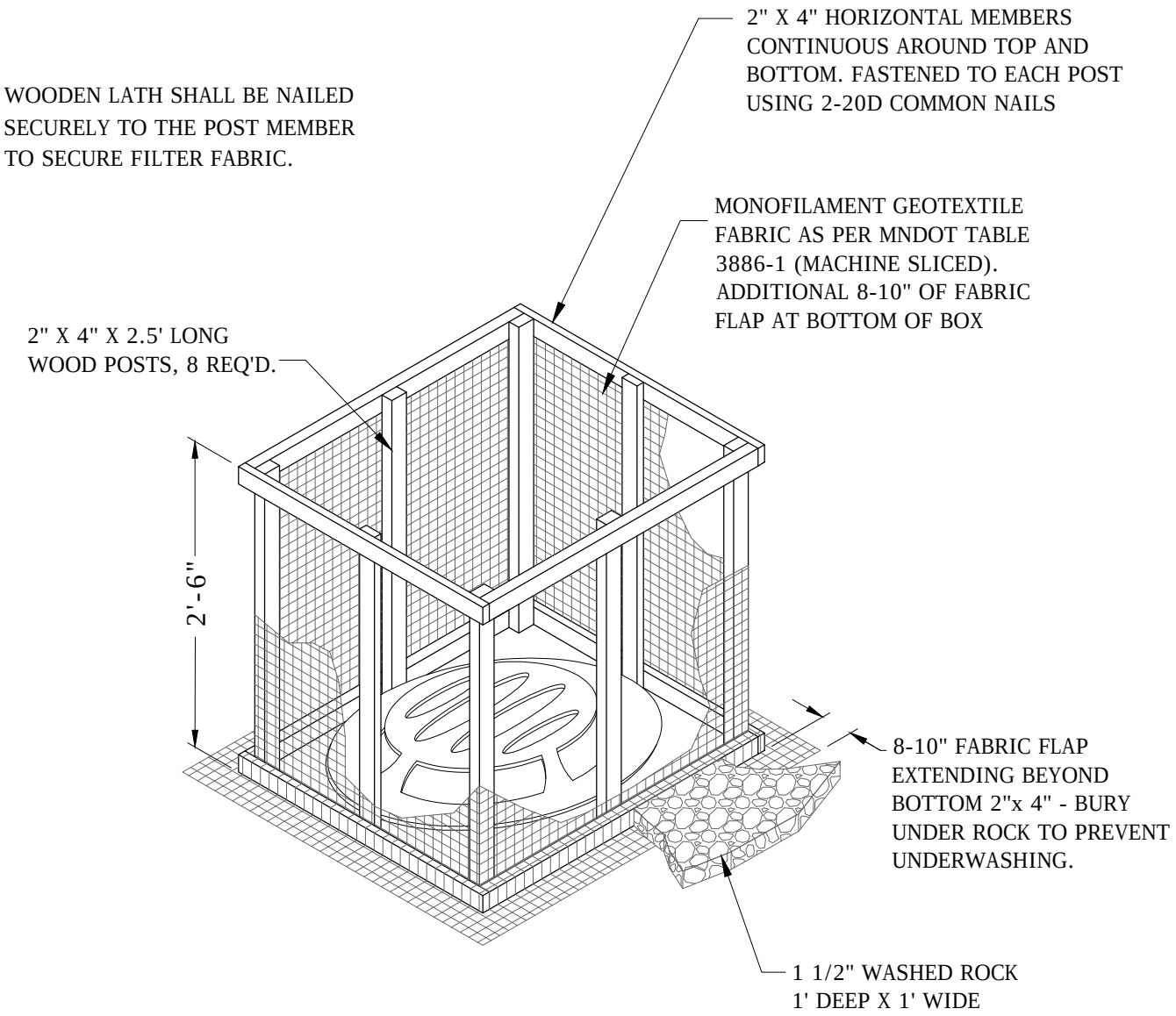

NOTES:

-CONTRACTOR SHALL CONSTRUCT SILT BOX TO FIT AROUND THE INLET STRUCTURE WITH 6" MINIMUM CLEARANCE TO EDGES OF STRUCTURE.

-SILT BOX TO BE PLACED ON AN EVEN SURFACE 6" BELOW STRUCTURE OPENING.

-TOP OF SILT BOX TO EXTEND 18" MINIMUM ABOVE EXISTING GRADE.

Apple Valley

INLET PROTECTION, TYPE B
SILT BOX - YARD

LAST REVISION:
JUNE 2009

PLATE NO.
ERO-12

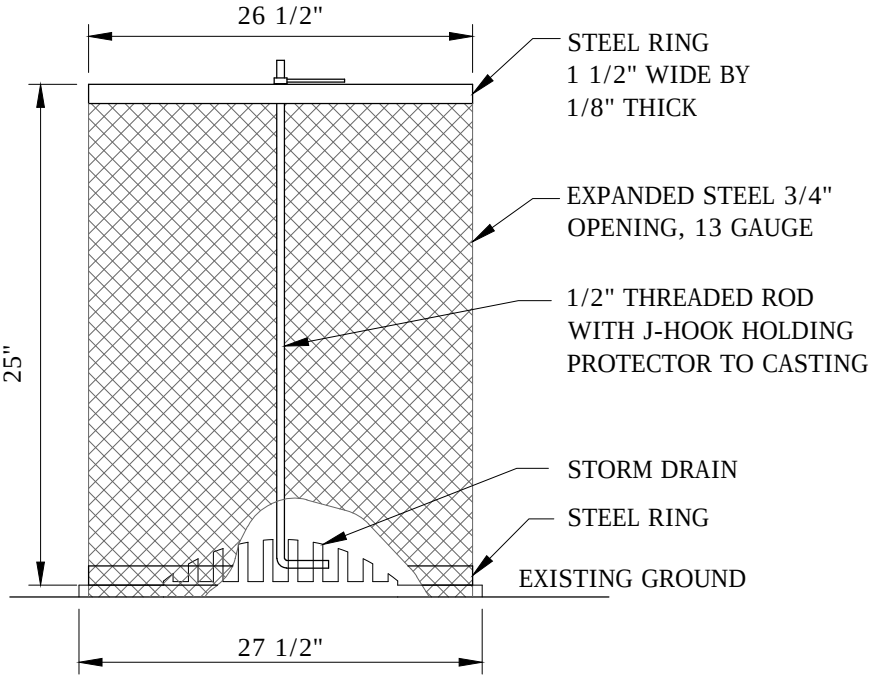

ELEVATION

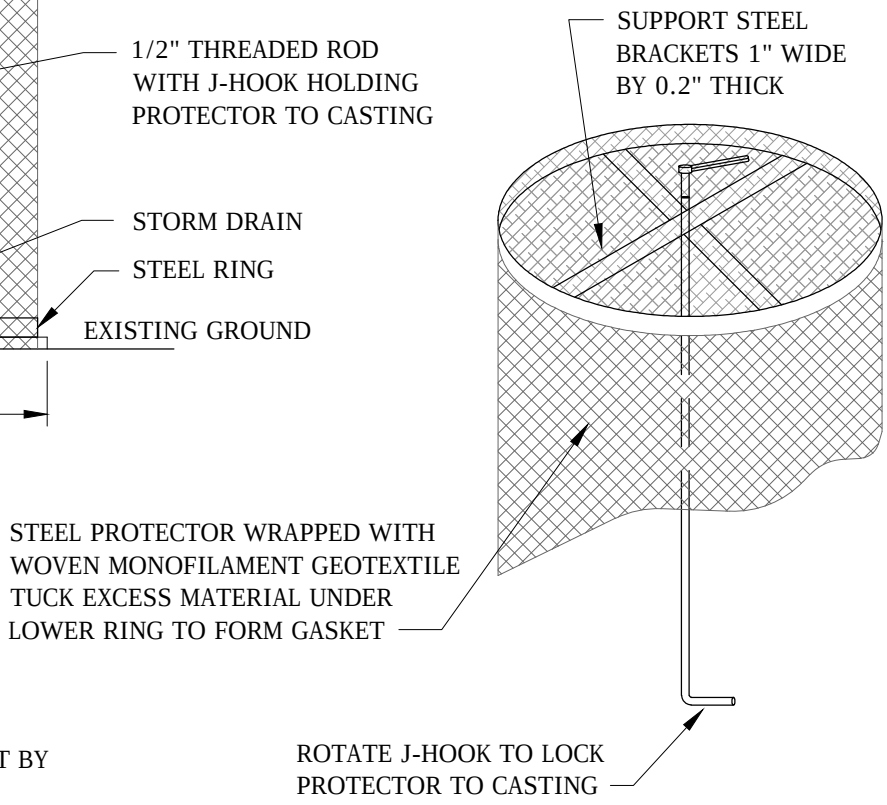

ISOMETRIC VIEW

- PRE-MANUFACTURED UNIT BY CIRCLE "H" ENTERPRISES

Apple Valley

INLET PROTECTION, TYPE B
CIRCLE "H"

LAST REVISION:
OCT 2009

PLATE NO.
ERO-13

DEVICES TO BE INSTALLED IMMEDIATELY UPON INSTALLATION OF CONCRETE STRUCTURE CONE OR TOP SLAB. CASTING ASSEMBLY MUST ALSO BE AT LEAST TEMPORARILY IN PLACE.

DEVICES SHOWN ARE AS MANUFACTURED BY ROYAL ENTERPRISES. MODEL NO. 27" INFRASAFE SEDIMENT CONTROL BARRIER-DG.

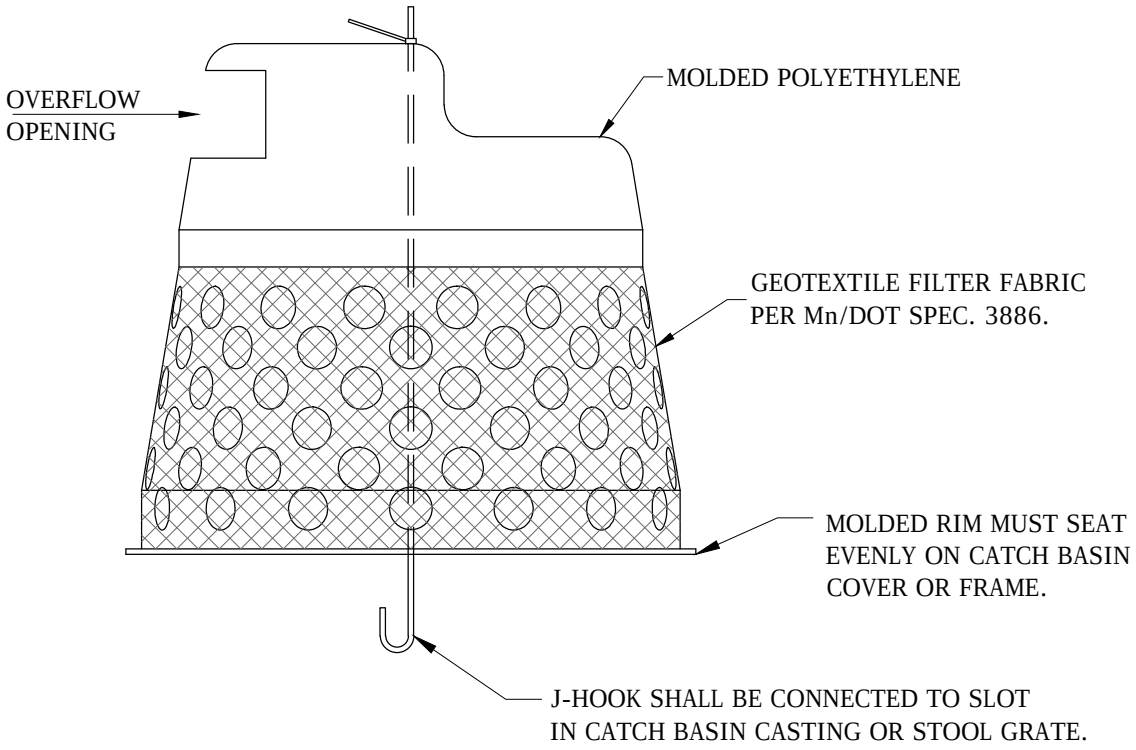

Apple Valley

INLET PROTECTION, TYPE B
INFRASAFE SEDIMENT CONTROL BARRIER

LAST REVISION:
JUNE 2009

PLATE NO.
ERO-14

DEVICES TO BE INSTALLED IMMEDIATELY UPON INSTALLATION OF CONCRETE STRUCTURE CONE OR TOP SLAB.

DEVICES SHOWN ARE AS MANUFACTURED BY WIMCO. MODEL NO. OF UNIT SHOWN: RD 27.

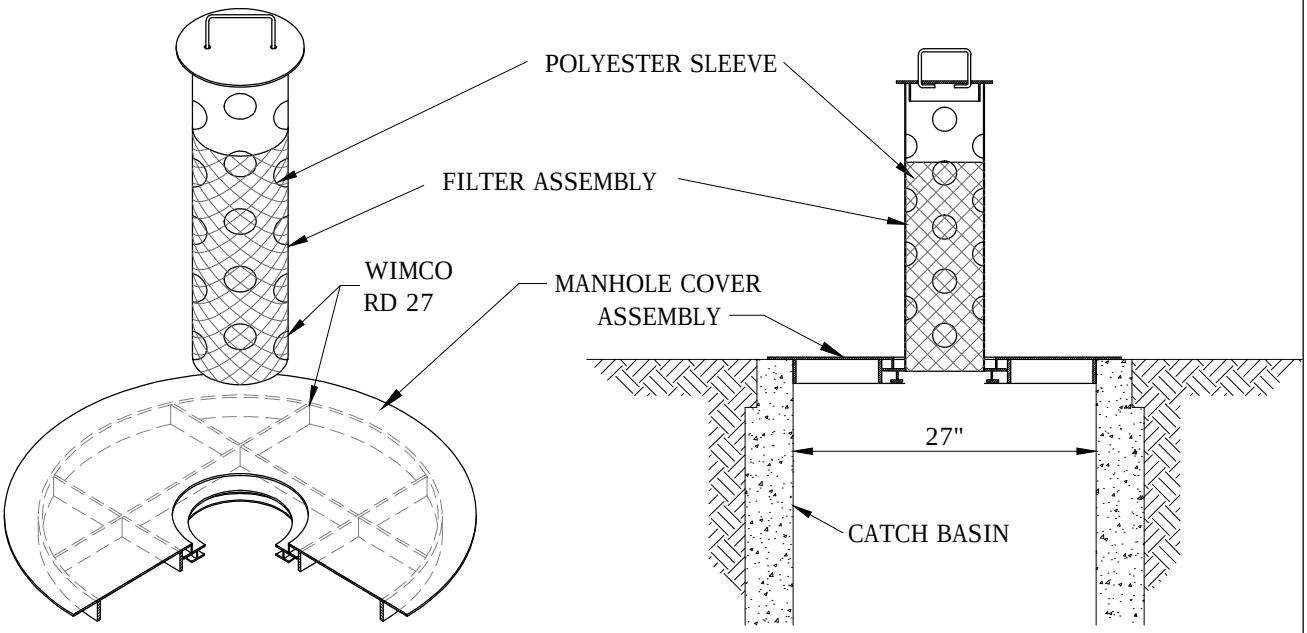

ISOMETRIC VIEW

ELEVATION

Apple Valley

INLET PROTECTION, TYPE B

LAST REVISION:
JUNE 2009

PLATE NO.
ERO-15

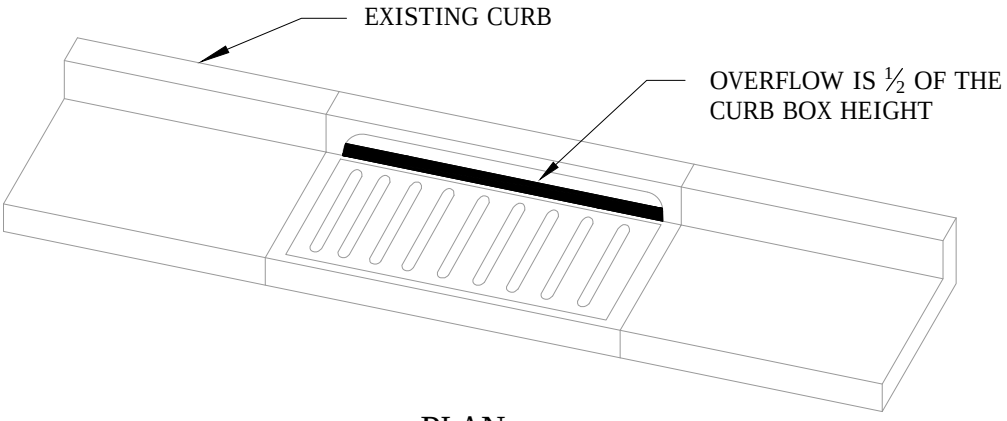

PLAN

WIMCO ROAD DRAIN CG-23* HIGH FLOW
INLET PROTECTION CURB AND GUTTER
MODEL OR CITY APPROVED EQUAL.

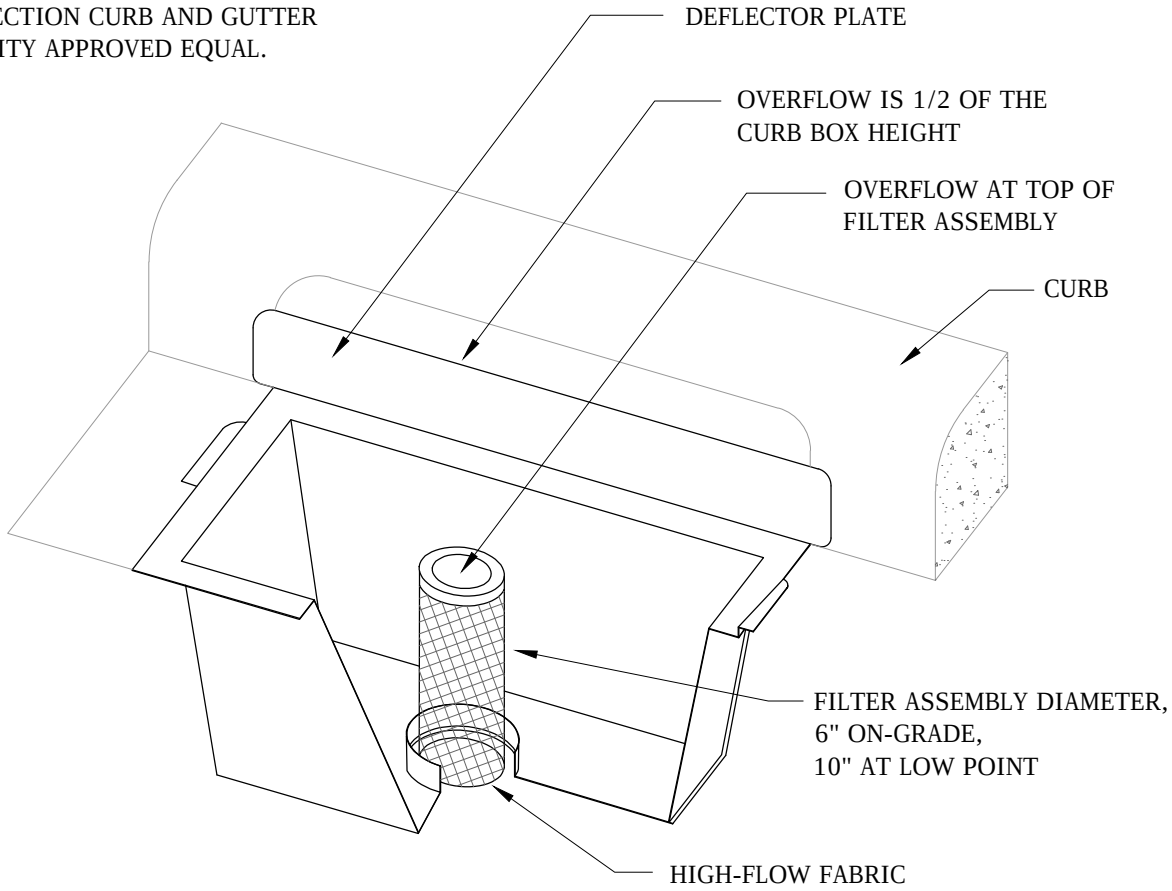

* FOR THE NEW R-3290-VB STANDARD CASTING, INSTALL
WIMCO ROAD DRAIN CG-3290 OR CITY APPROVED EQUAL.

Apple Valley

INLET PROTECTION, TYPE C
CATCH BASIN INSERT
AFTER PAVING

LAST REVISION:
JUNE 2009

PLATE NO.
ERO-16

DEVICES TO BE INSTALLED IMMEDIATELY UPON INSTALLATION OF CASTING ASSEMBLY.

DEVICES SHOWN ARE AS MANUFACTURED BY WIMCO.

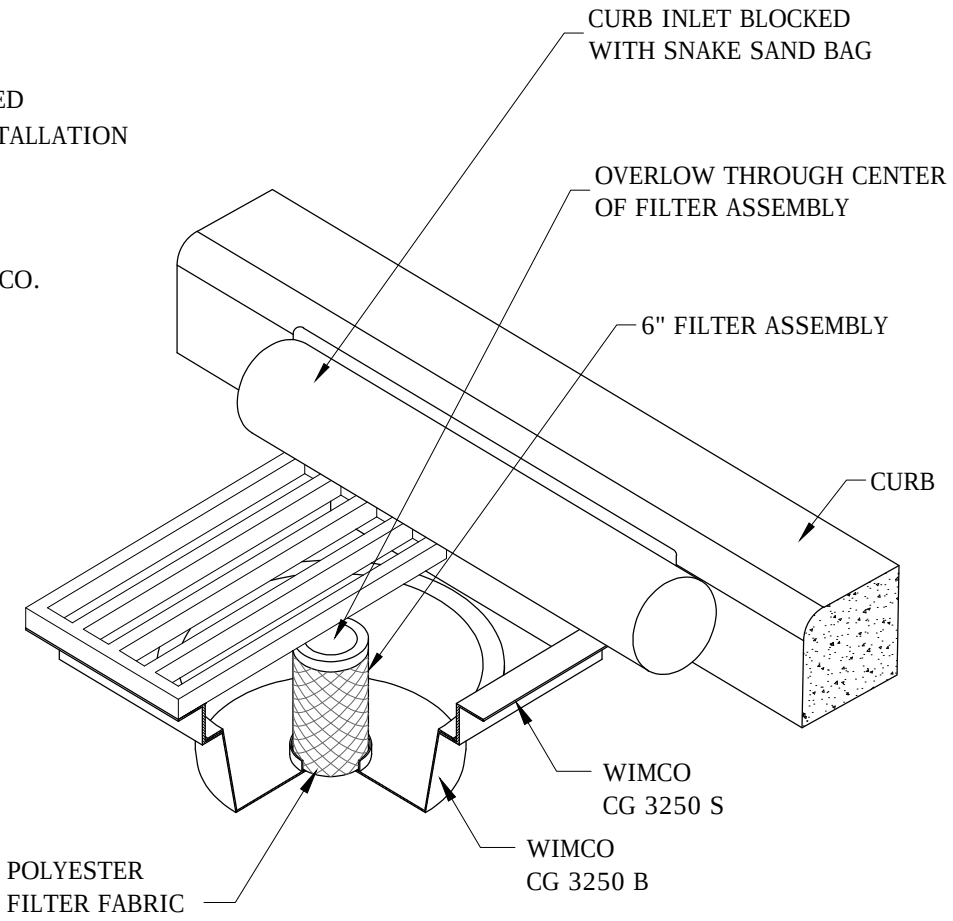

Apple Valley

INLET PROTECTION, TYPE C
WIMCO

LAST REVISION:
JUNE 2009

PLATE NO.
ERO-17

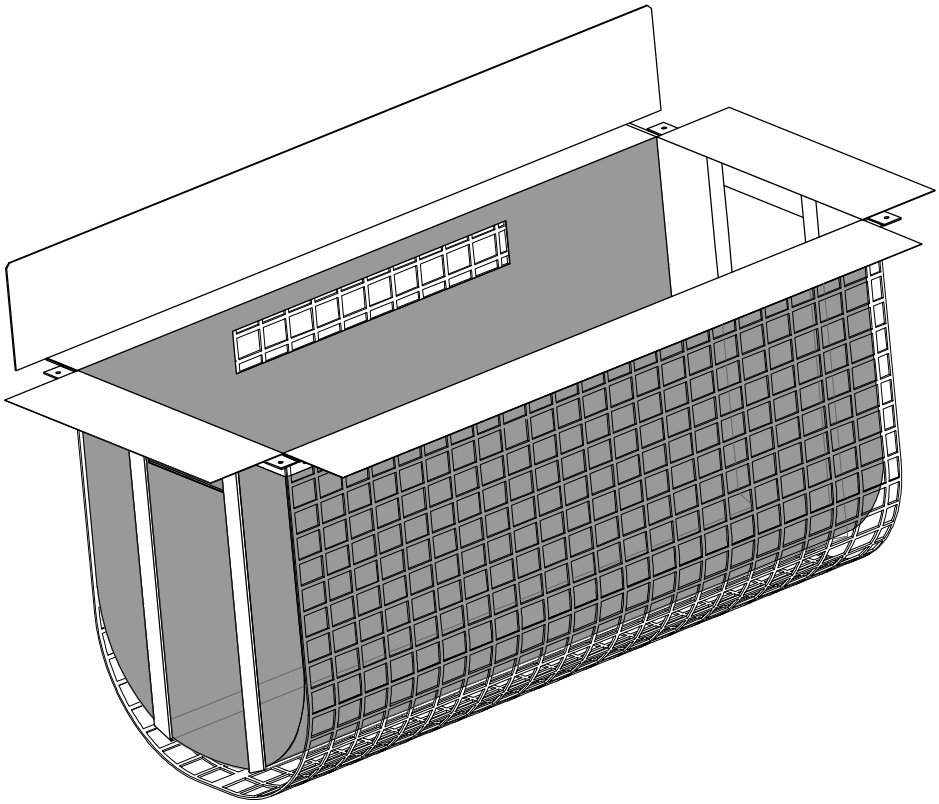

DEVICE SHOWN IS MANUFACTURED BY STORM WATER SOLUTIONS

Apple Valley

INLET PROTECTION, TYPE C
SILT TRAPPER

LAST REVISION:
JUNE 2009

PLATE NO.
ERO-18

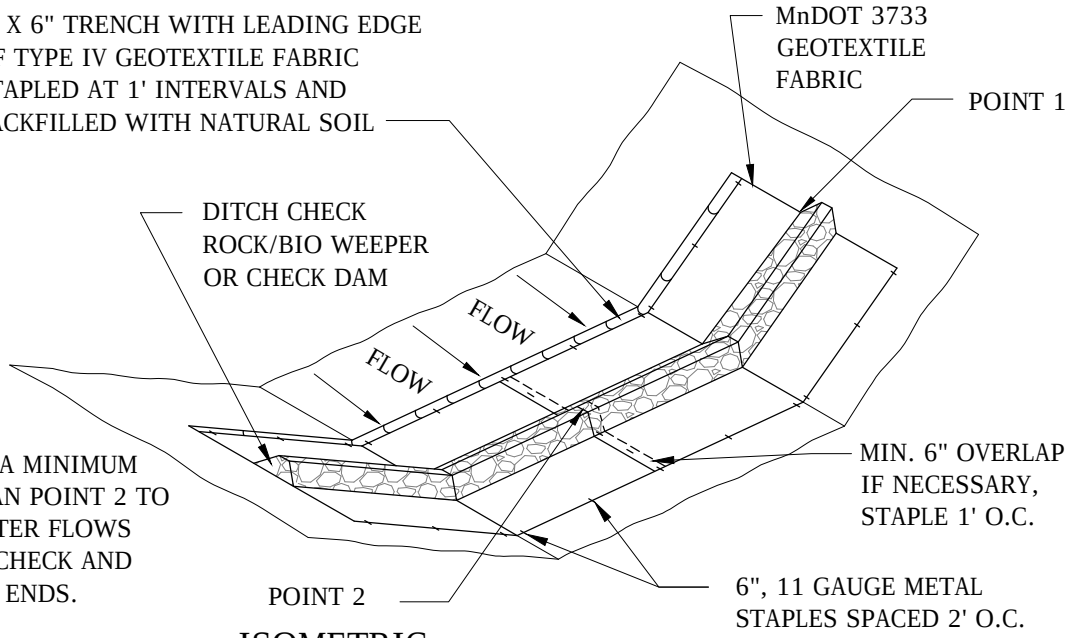

NOTE:
POINT 1 MUST BE A MINIMUM OF 6" HIGHER THAN POINT 2 TO ENSURE THAT WATER FLOWS OVER THE DITCH CHECK AND NOT AROUND THE ENDS.

ISOMETRIC

	HEIGHT (INCHES)	WIDTH (INCHES)	MATERIAL
SMALL CHECK	24	12 - 18	MnDOT 3601 CLASS II RIP RAP
LARGE CHECK	36	24 - 30	MnDOT 3601 CLASS III RIP RAP
ROCK WEEPER	18	6 - 12	MnDOT 3882 TYPE 9 MULCH (1 1/2" WASHED ROCK)

NOTES:
1. DIG 6" X 6" TRENCH
2. LAY BLANKET IN TRENCH
3. STAPLE AT 1.5' INTERVALS
4. BACKFILL WITH NATURAL SOIL AND COMPACT

ANCHOR TRENCH DETAIL

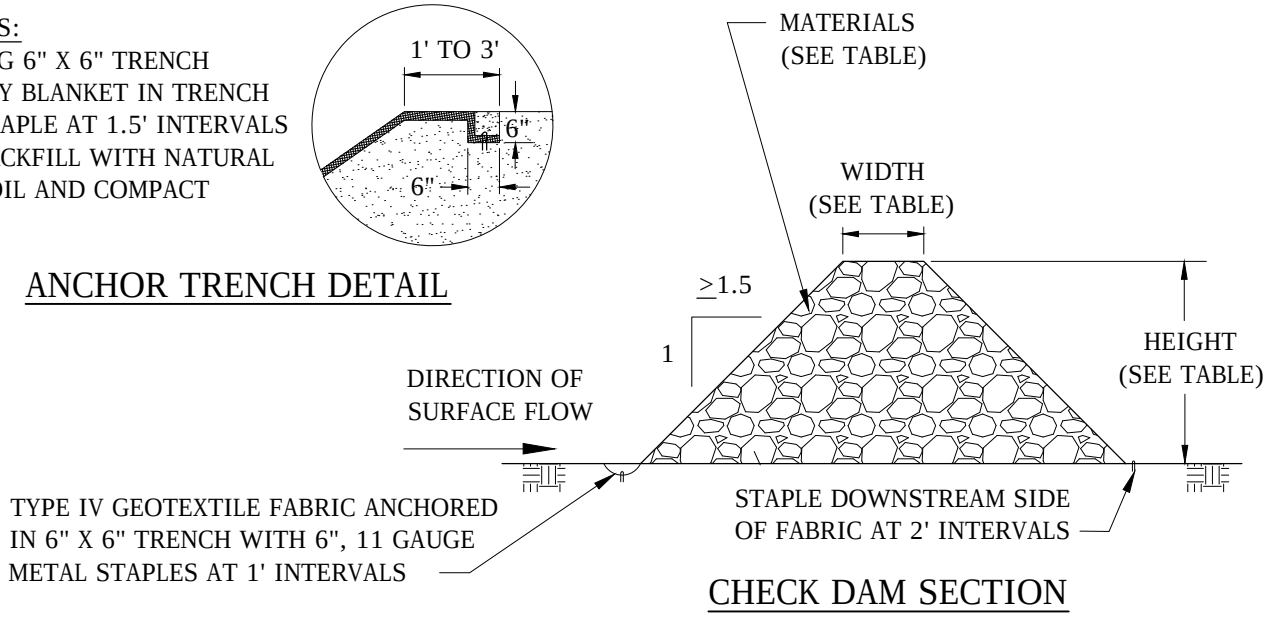

CHECK DAM SECTION

Apple Valley

ROCK DITCH CHECK / WEEPER
SIZING & MATERIALS

LAST REVISION:
JUNE 2009

PLATE NO.
ERO-19

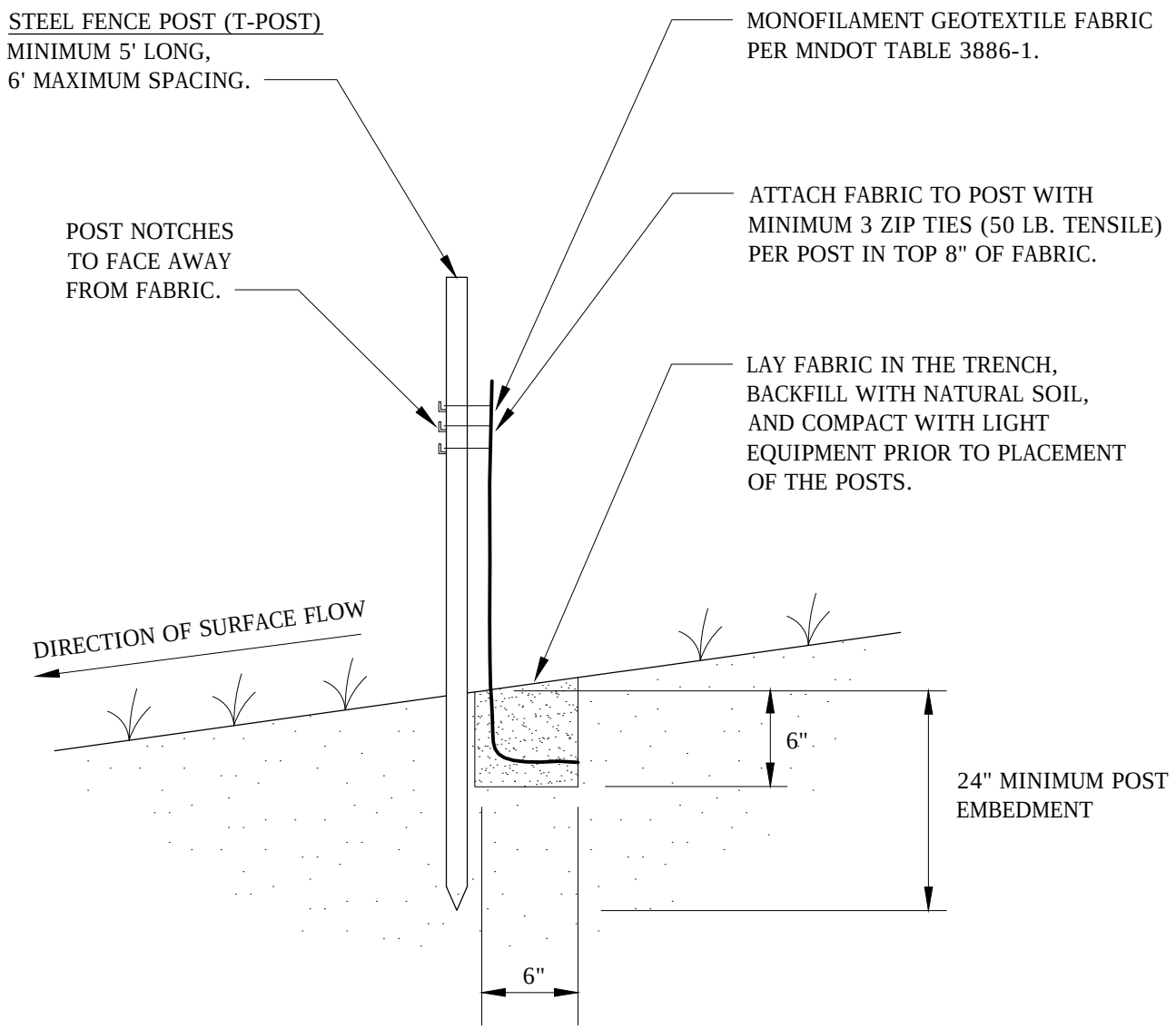

NOTES:

1. SPLICING WILL BE MADE AT OPPOSING SILT FENCE POSTS BY PLACING POSTS AND SILT FENCE NEXT TO EACH OTHER AND ROTATING 360°.
2. HEAVY DUTY SILT FENCE IS MACHINE SLICED TYPE SILT FENCE THAT IS HAND INSTALLED IN AREAS INACCESSIBLE TO EQUIPMENT DUE TO SPACE LIMITATIONS, WET SOILS, STEEP SLOPES, ETC.

Apple Valley

SILT FENCE
HEAVY DUTY

LAST REVISION:
JUNE 2009

PLATE NO.
ERO-2

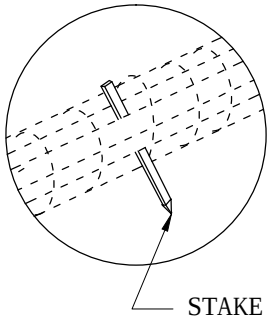

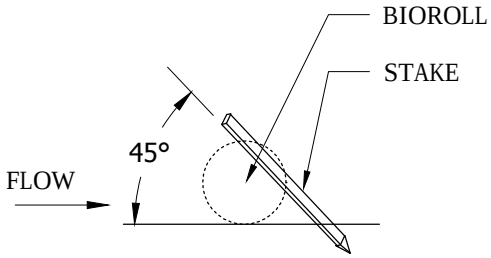

2" x 2" x 16" LONG WOODEN STAKES AT 1'-0" SPACING . STAKES SHALL BE DRIVEN THROUGH THE BACK HALF OF THE FILTER LOG AT AN ANGLE OF 45° WITH THE TOP OF THE STAKE POINTING UPSTREAM.

NOTE:
POINT 1 MUST BE A MINIMUM OF 6" HIGHER THAN POINT 2 TO ENSURE THAT WATER FLOWS OVER THE DIKE AND NOT AROUND THE ENDS.

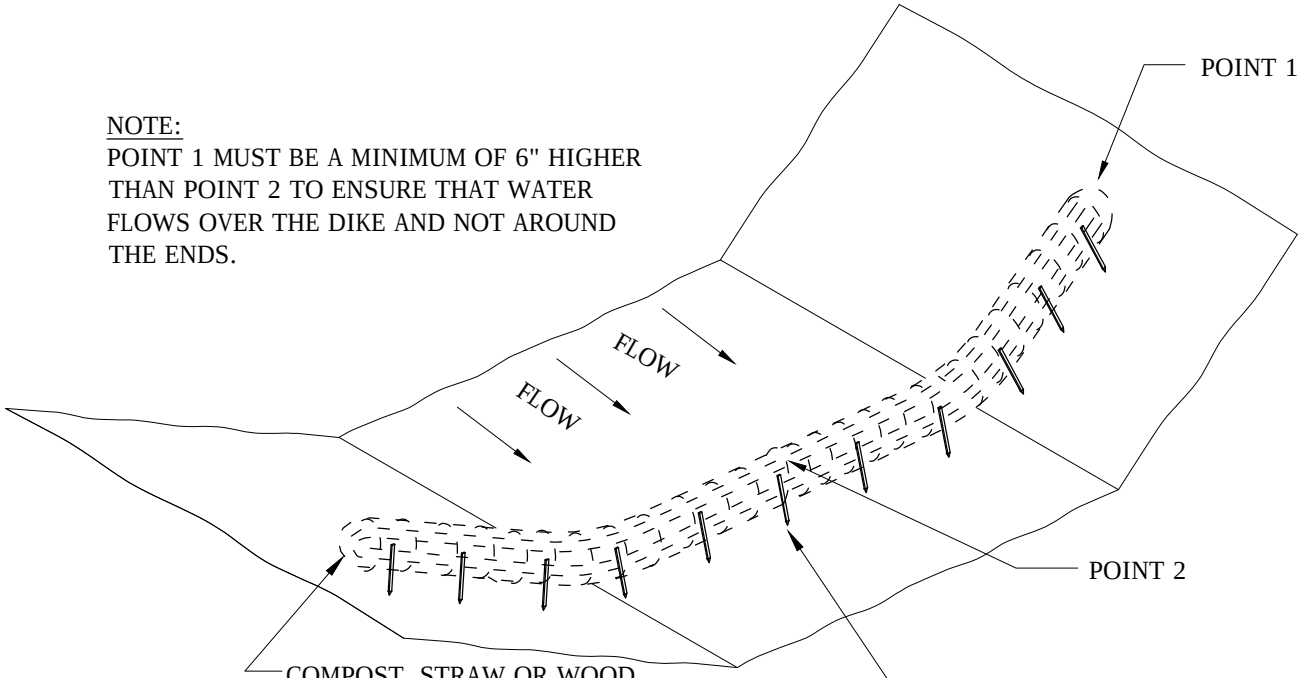

Apple Valley

FILTER LOG DITCH CHECK

LAST REVISION:
JUNE 2009

PLATE NO.
ERO-20

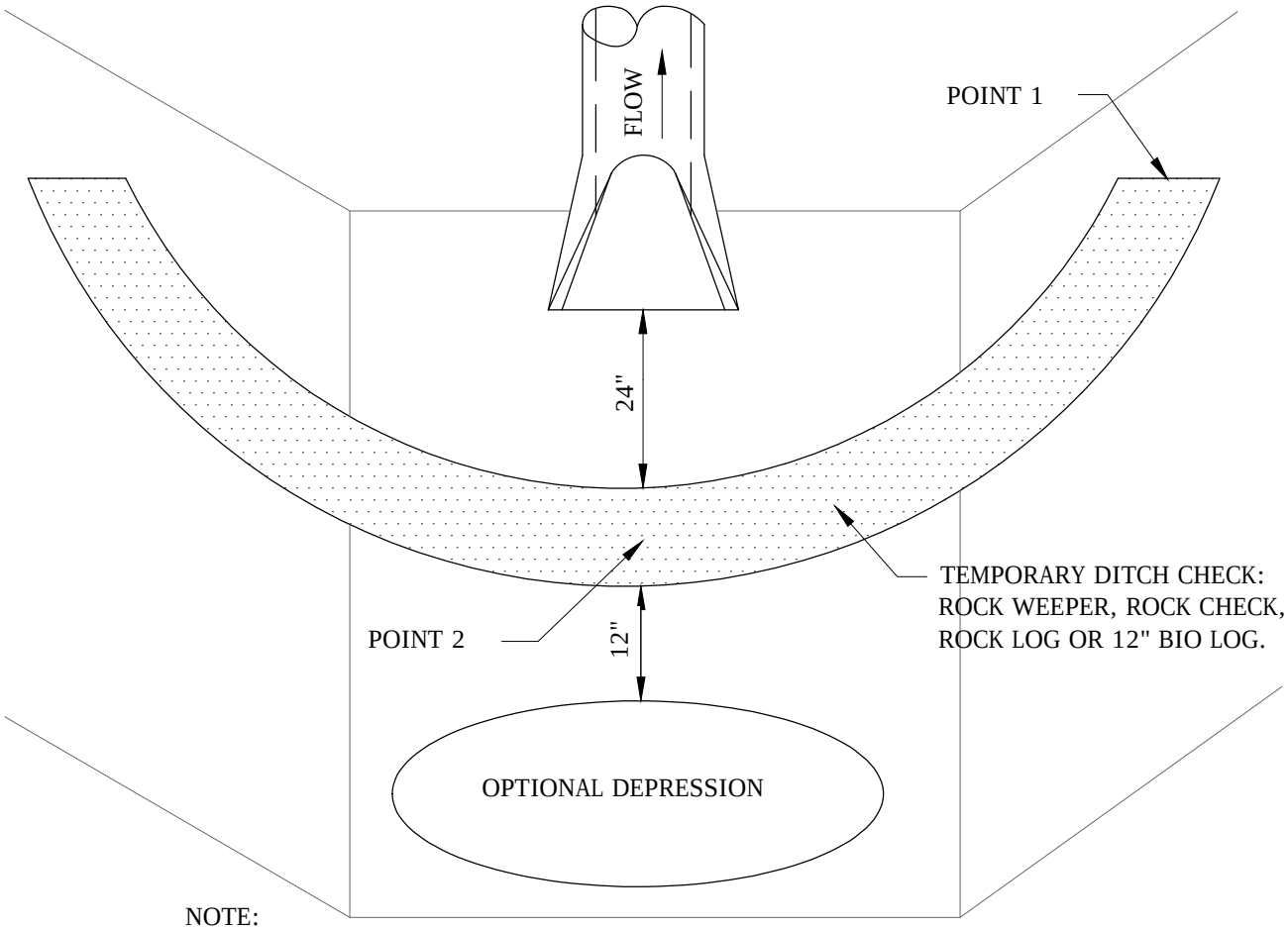

NOTE:
POINT 1 MUST BE MINIMUM OF 6" HIGHER THAN POINT 2, TO ENSURE WATER FLOWS THROUGH AND OVER THE CHECK AND NOT AROUND THE ENDS.

PLAN

	HEIGHT (INCHES)	WIDTH (INCHES)	MATERIAL
SMALL CHECK	24	12-18	MNDOT 3601 CLASS II RIP-RAP
ROCK WEEPER	18	6-12	MNDOT 3882 TYPE 9 MULCH (1 1/2" WASHED ROCK)

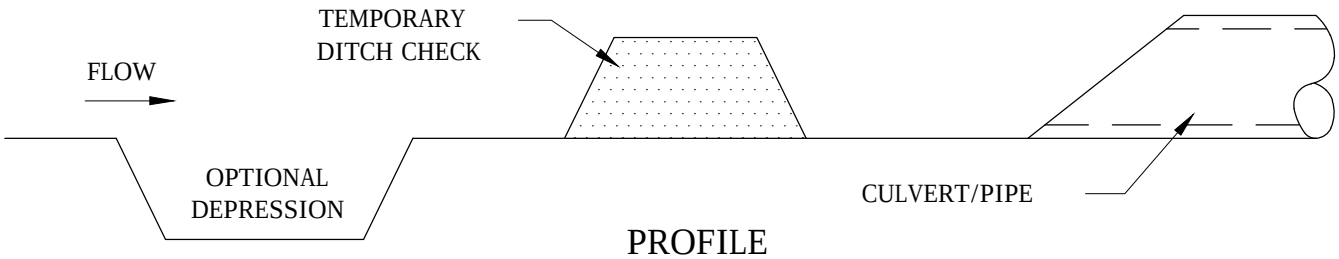

PROFILE

Apple Valley

CULVERT/PIPE PROTECTION

LAST REVISION:
JUNE 2009

PLATE NO.
ERO-21

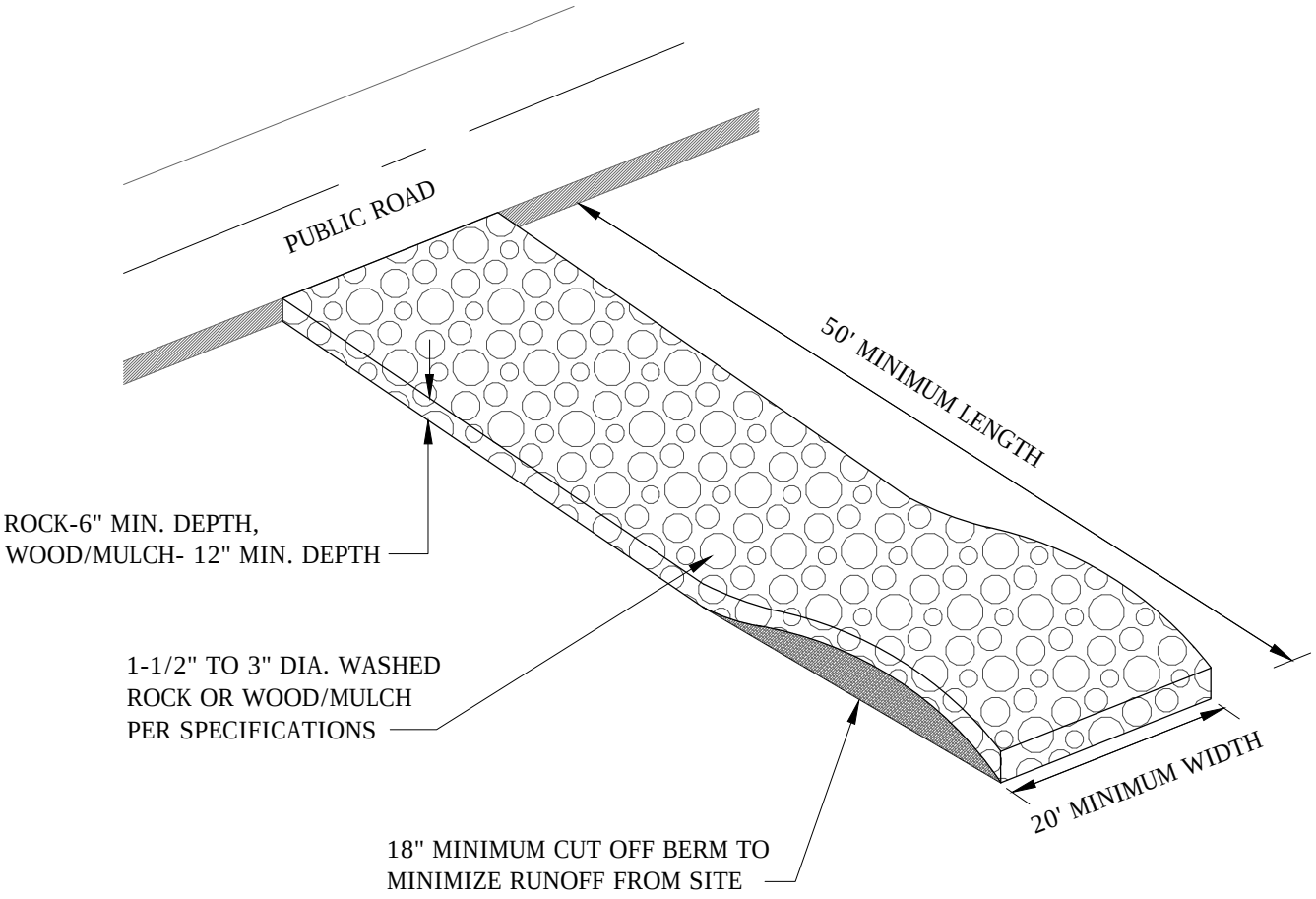

NOTES:

1. MnDOT 3733 TYPE 4 FILTER FABRIC SHALL BE PLACED UNDER ROCK OR MULCH TO STOP MUD MIGRATION THROUGH MATERIAL.
2. FUGITIVE ROCK OR MULCH WILL BE REMOVED FROM ADJACENT ROADWAYS DAILY OR MORE FREQUENTLY AS NECESSARY.
3. CONSTRUCTION ENTRANCE MUST BE CONSTRUCTED PRIOR TO THE COMMENCEMENT OF GRADING OPERATIONS ON THE SITE.
4. THE ENTRANCE MUST BE MAINTAINED IN PROPER CONDITION TO PREVENT TRACKING OF MUD OFF THE SITE. THIS MAY REQUIRE PERIODIC TOPDRESSING WITH ADDITIONAL ROCK, WOOD/MULCH, OR REMOVAL AND REINSTALLATION OF THE PAD.
5. THIS ENTRANCE WILL BE USED BY ALL VEHICLES ENTERING OR LEAVING THE PROJECT.
6. THE CONSTRUCTION ENTRANCE WILL BE REMOVED PRIOR TO THE PLACEMENT OF BITUMINOUS SURFACING.

Apple Valley

CONSTRUCTION ENTRANCE
ROCK
WOOD / MULCH

LAST REVISION:
JUNE 2009

PLATE NO.
ERO-22

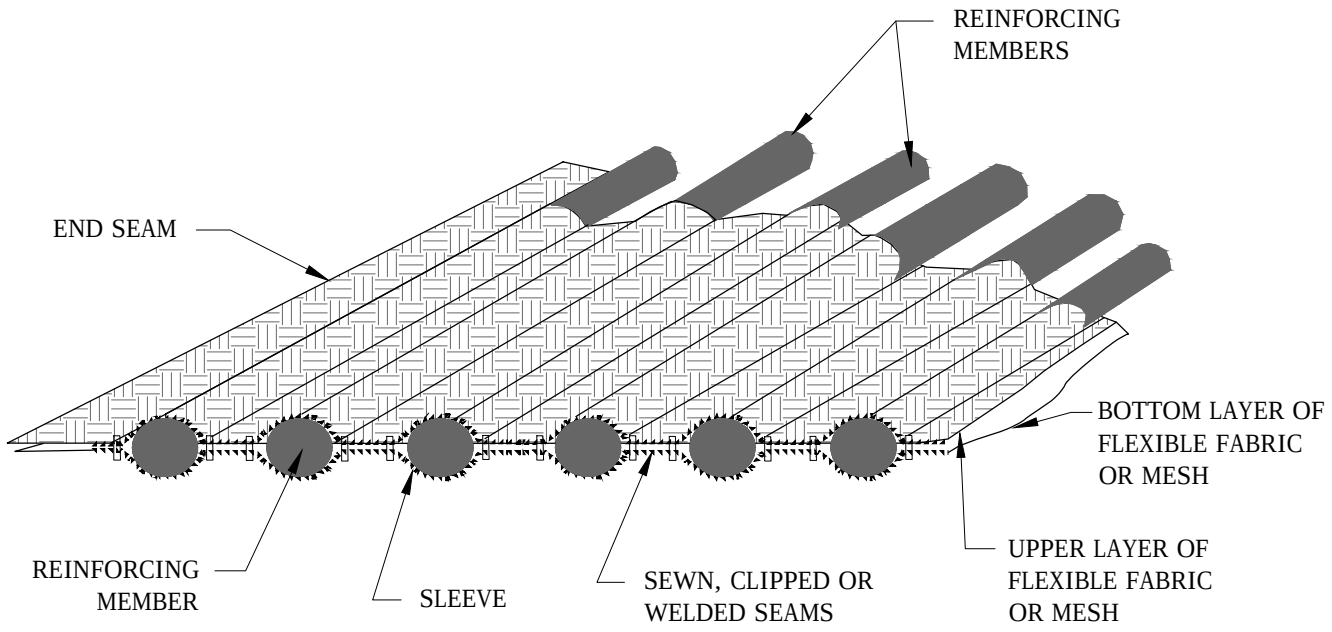

SEW ENDS OR CLIP SHUT TO CONFINE REINFORCING MEMBERS (NOT SHOWN)

CUT AWAY SECTION

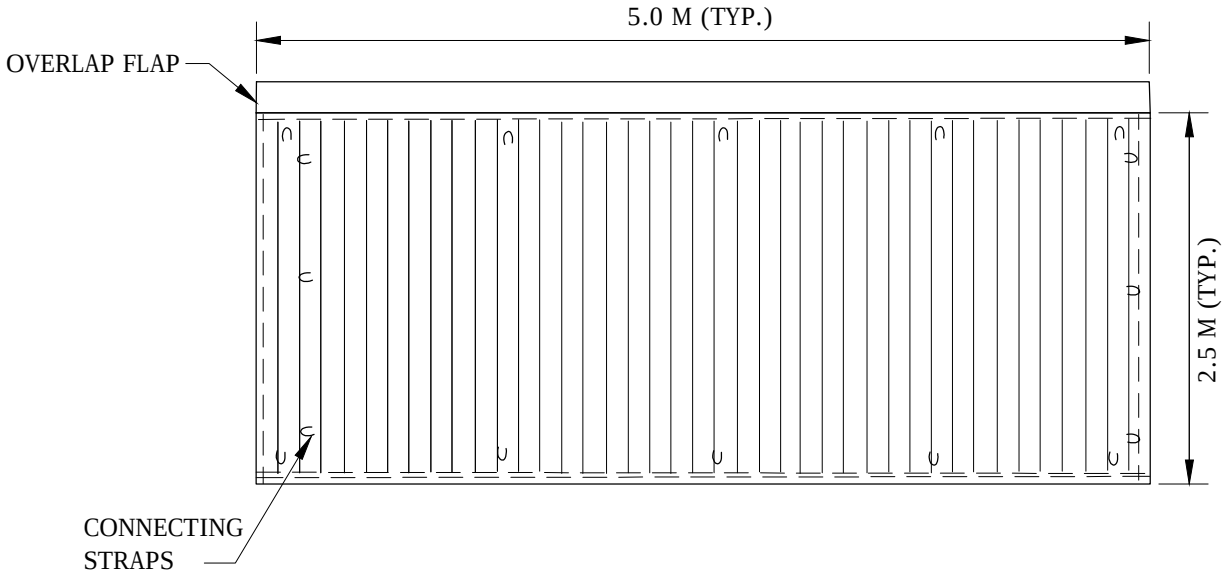

PLAN VIEW

Apple Valley

CONSTRUCTION ENTRANCE
AGES MUD MAT

LAST REVISION:
JUNE 2009

PLATE NO.
ERO-23

NOTES:
BASIN USED FOR 10 ACRE DRAINAGE AREA OR MORE.
DESIGN RUNOFF VOLUME IS FROM A 2-YR, 24-HR STORM PER ACRE DRAINED TO THE BASIN.
BASIN VOLUME MUST BE A MIN. OF 1800 CUBIC FEET/ACRE.
SEE PLANS/SPECIFICATIONS FOR BASIN DIMENSIONS AND PIPE SIZE & SLOPE.

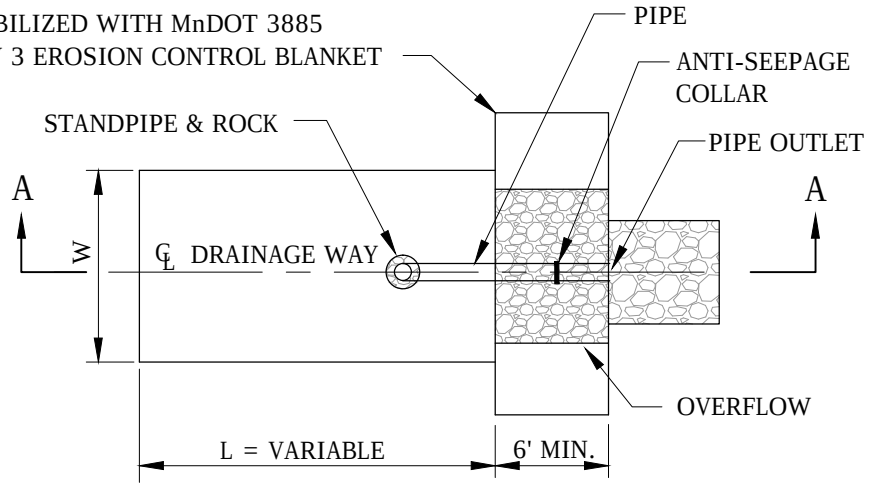

PLAN VIEW

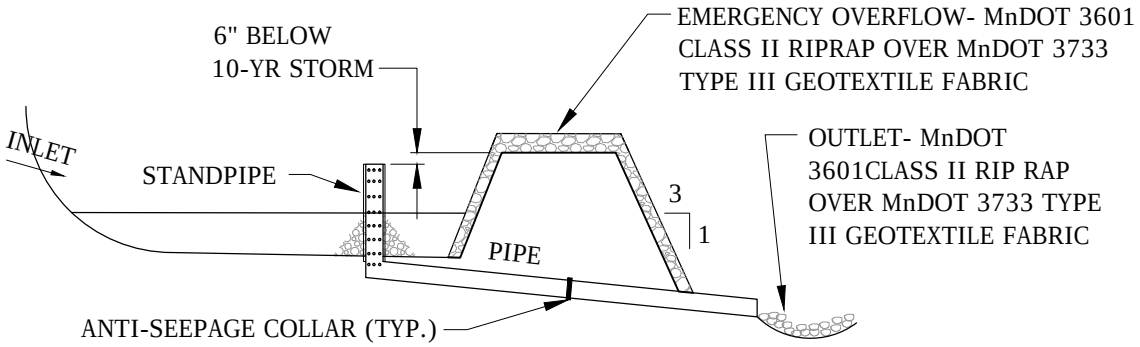

SECTION A-A

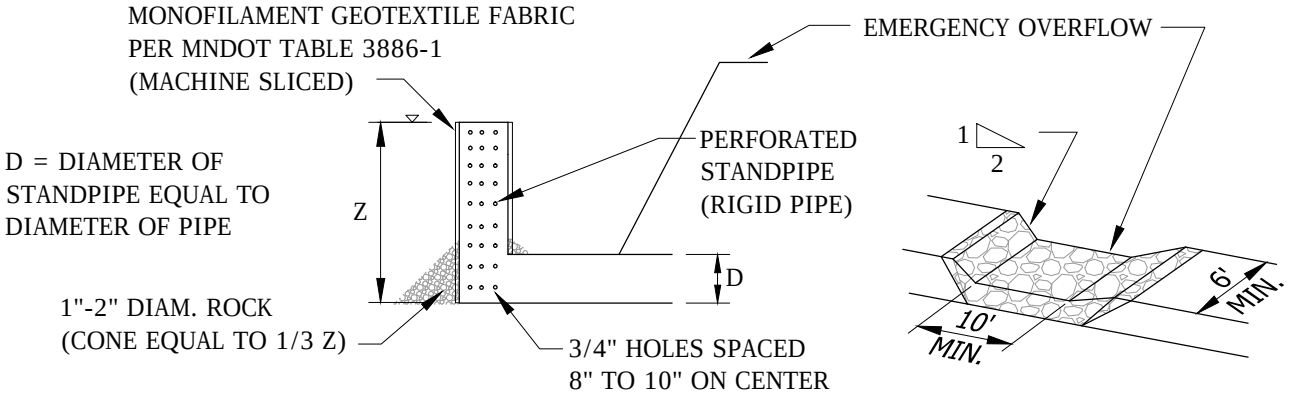

BASIN STANDPIPE AND EMERGENCY OVERFLOW

Apple Valley

TEMPORARY SEDIMENTATION BASIN
STANDPIPE OUTLET

LAST REVISION:
JUNE 2009

PLATE NO.
ERO-24

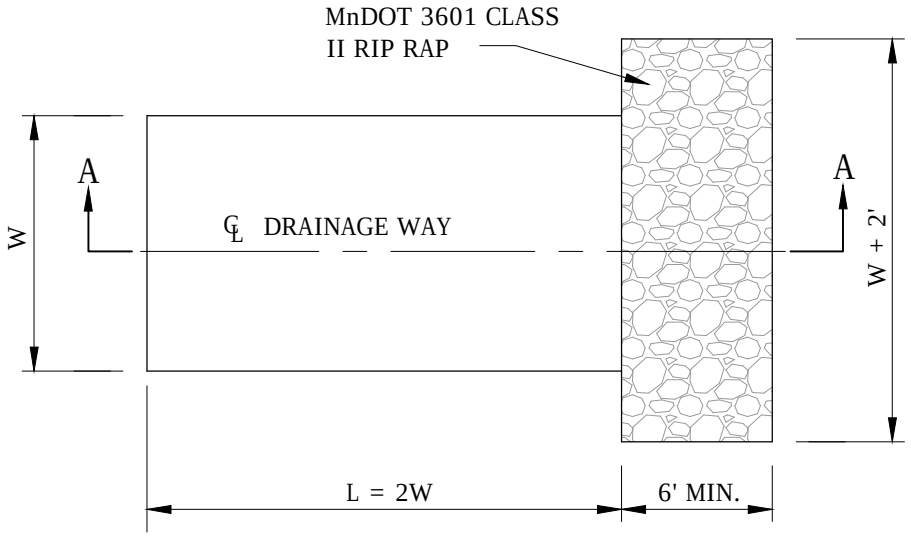

PLAN VIEW

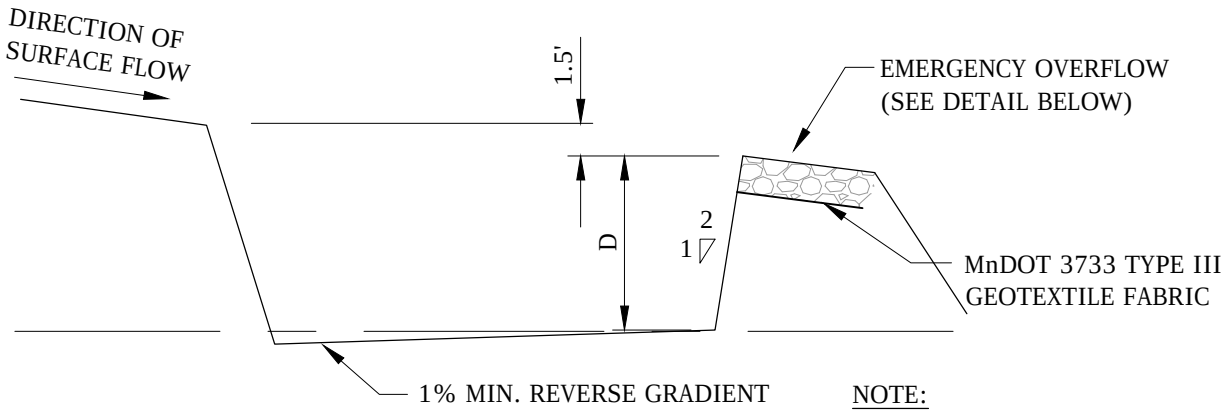

SECTION A-A

NOTE:
D=3' MIN., 5' MAX.
W=10' MIN., 25' MAX. W(FT.)=
10 X DRAINAGE AREA (AC.)

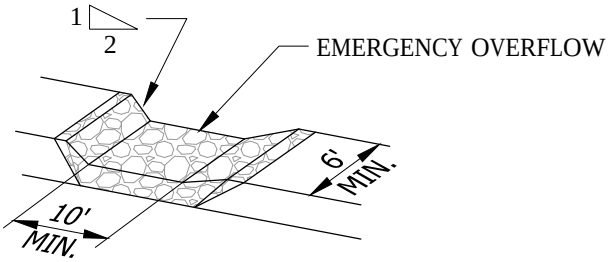

OVERFLOW DETAIL

Apple Valley

TEMPORARY SEDIMENT TRAP

LAST REVISION:
JUNE 2009

PLATE NO.
ERO-25

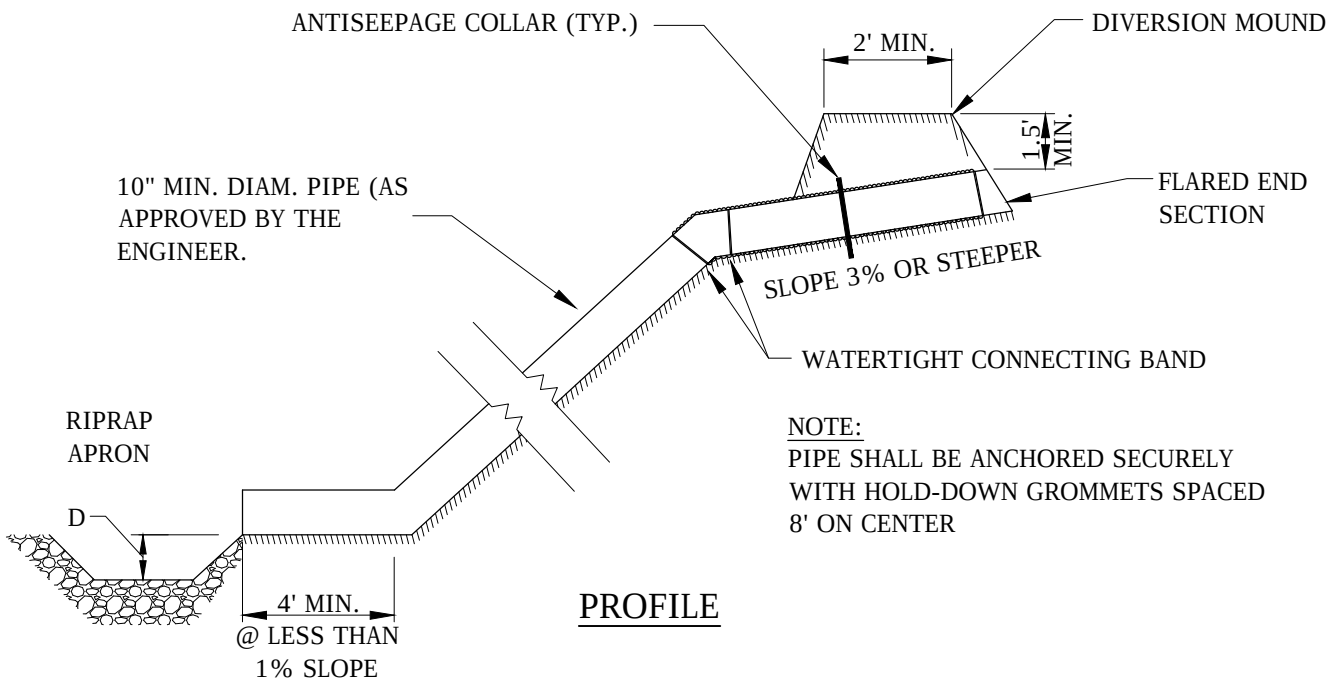

NOTE:
PIPE SHALL BE ANCHORED SECURELY WITH HOLD-DOWN GROMMETS SPACED 8' ON CENTER

PROFILE

DRAIN AREA (ACRES)	PIPE DIAMETER (INCHES)
0.5	12
0.75	15
1.5	18
2.5	21
3.5	24
5	30

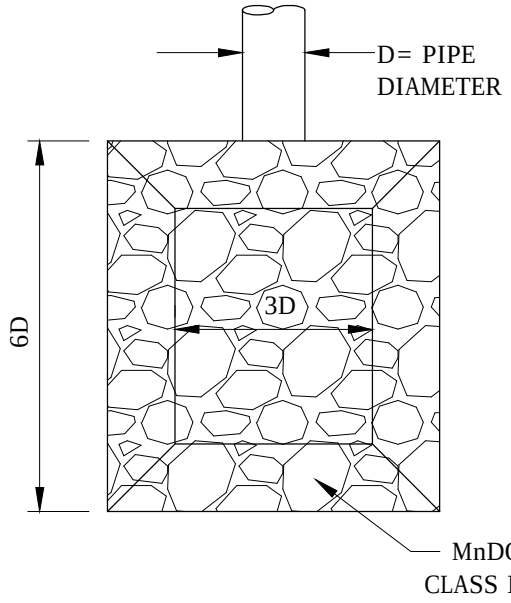

RIPRAP APRON PLAN

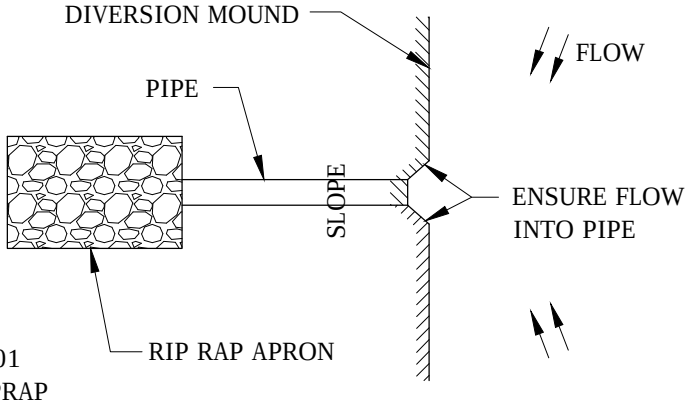

PLAN

Apple Valley

DIVERSION MOUND AND TEMPORARY PIPE DOWNDRAIN

LAST REVISION:
JUNE 2009

PLATE NO.
ERO-26

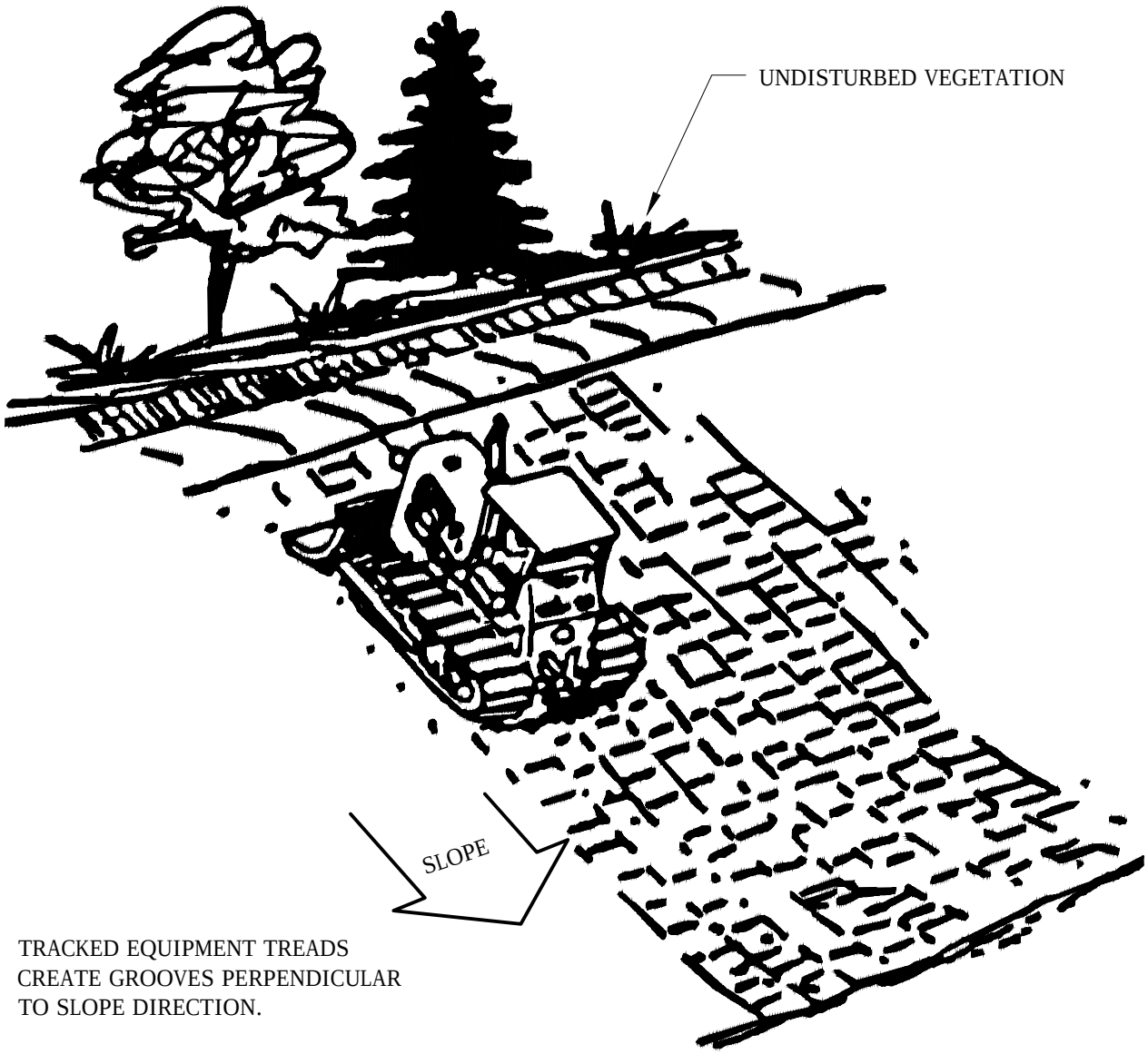

TRACKED EQUIPMENT TREADS
CREATE GROOVES PERPENDICULAR
TO SLOPE DIRECTION.

NOTE:
ALL SLOPES WITH A GRADE EQUAL TO OR STEEPER THAN 3:1 REQUIRE SLOPE TRACKING. SLOPES WITH A GRADE MORE GRADUAL THAN 3:1 REQUIRE SLOPE TRACKING IF THE STABILIZATION METHOD IS EROSION CONTROL BLANKET OR HYDROMULCH.

Apple Valley

SLOPE TRACKING

LAST REVISION:
JUNE 2009

PLATE NO.
ERO-27

NOTES:

1. ALL WASHING OF CONCRETE TRUCKS WILL BE CONDUCTED AT THIS SITE.
2. ALL DIMENSIONS ARE APPROXIMATE AND MAY BE ADJUSTED BASED ON SITE CONSTRAINTS.
3. WHEN WASHOUT PIT IS NO LONGER NEEDED, SOLIDIFIED CONCRETE AND THE ROCK PAD WILL BE DISPOED OF OFF-SITE AND THE AREA LEVELED OUT TO MATCH THE SURROUNDING GRADE.
4. ALL LIQUID & SOLID WASTES MUST BE CONTAINED IN A LEAKPORRF CONTAINMENT FACILITY OR IMPERMEABLE LINER.

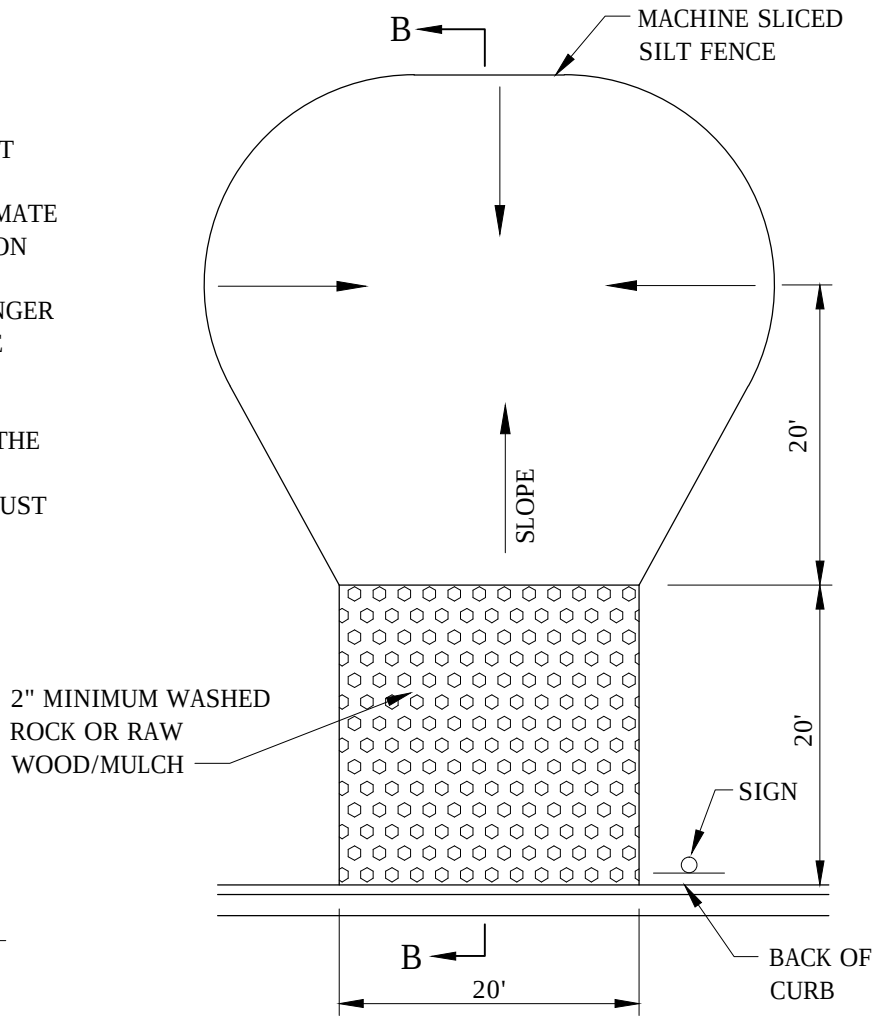

PLAN

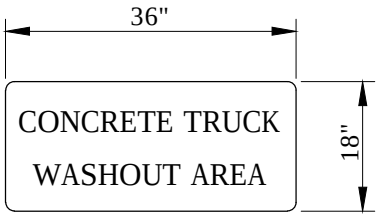

SIGN DETAIL

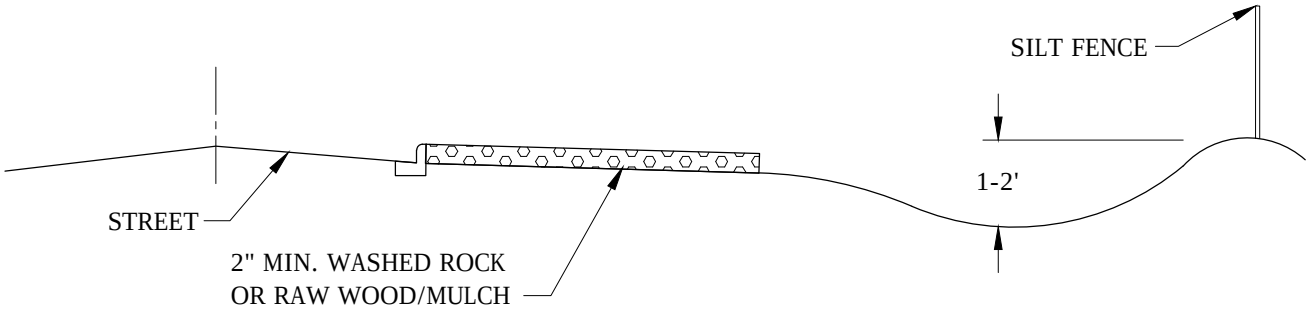

SECTION B-B

Apple Valley

CONCRETE WASHOUT PIT

LAST REVISION:
JUNE 2009

PLATE NO.
ERO-28

NOTE:
DEVICE SHOWN IS MANUFACTURED BY
CONCRETE WASHOUT SYSTEMS, INC.

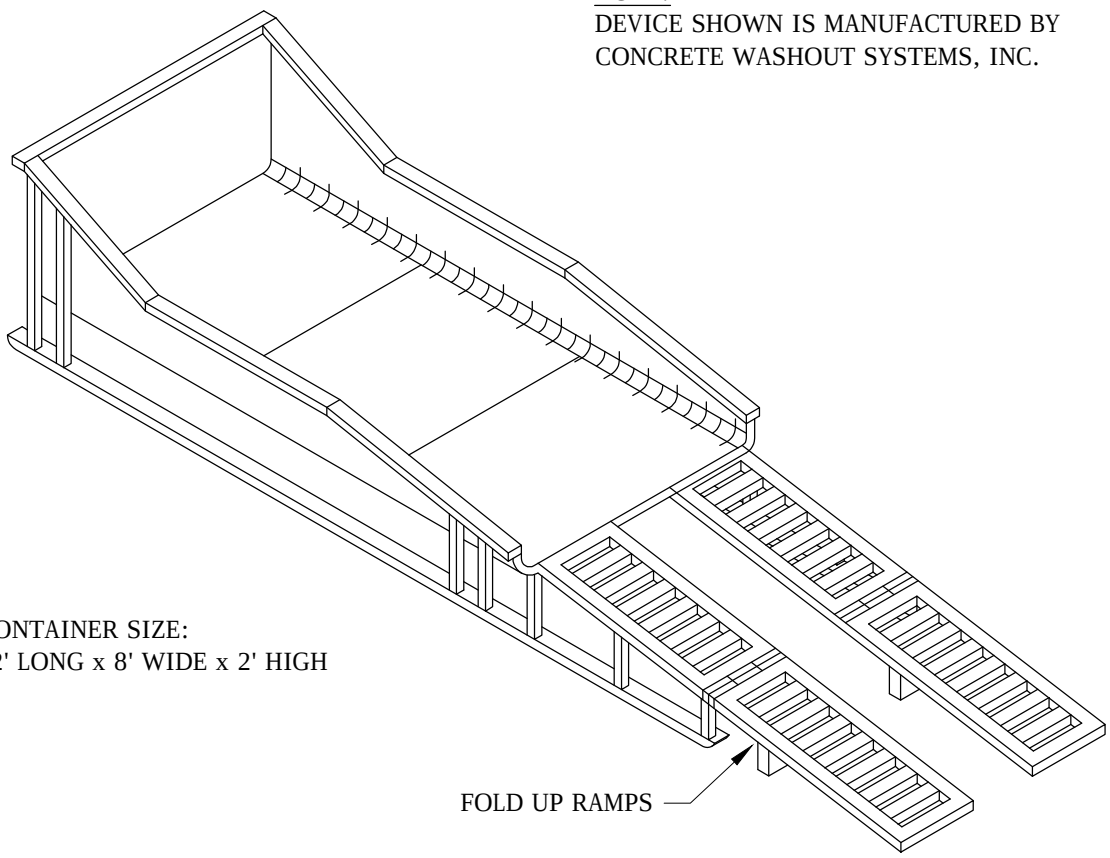

CONTAINER SIZE:
12' LONG x 8' WIDE x 2' HIGH

NOTES:

1. CONTAINER IS TO BE PORTABLE, TEMPORARY, SELF-CONTAINED, AND WATERTIGHT TO CAPTURE AND CONTAIN CAUSTIC CONCRETE WASTEWATER AND WASHOUT MATERIAL TO A CAPACITY OF APPROXIMATELY 350 YARDS OF POURED CONCRETE.
2. THE CONTAINER SHALL BE EQUIPPED WITH RAMPS. A RAMPLESS CONTAINER MAY BE USED IN CONJUNCTION WITH A RAMPED CONTAINER OR BY ITSELF IF A CONCRETE PUMP IS NOT NEEDED.
3. THE WASHOUT MUST BE DISPOSED OF OR TREATED AND RECYCLED IN AN ENVIRONMENTALLY SAFE MANNER AND IN ACCORDANCE WITH FEDERAL, STATE, OR LOCAL REGULATIONS.
4. INSPECT AND CLEAN OUT WHEN 3/4 FULL, NOT ALLOWING THE CONTAINER TO OVERFLOW.
5. INSPECT WASTEWATER LEVEL AND REQUEST A VACUUM IF NEEDED.
6. INSPECT SUBCONTRACTORS TO ENSURE THAT PROPER HOUSEKEEPING MEASURES ARE EMPLOYED WHEN WASHING OUT EQUIPMENT.

Apple Valley

PORTABLE CONCRETE
WASHOUT CONTAINER

LAST REVISION:
JUNE 2009

PLATE NO.
ERO-29

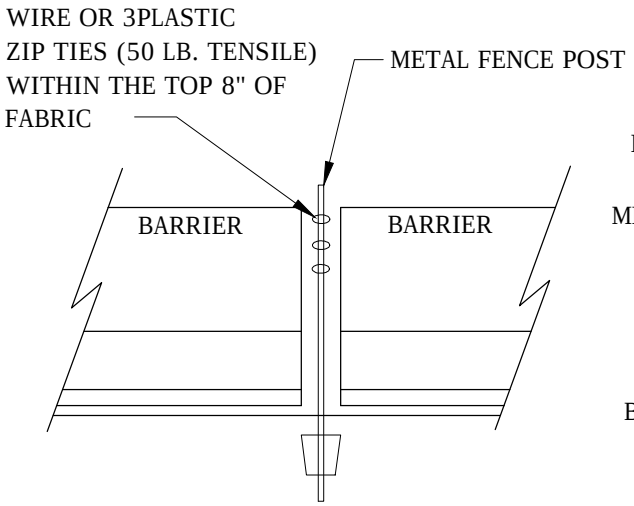

ELEVATION

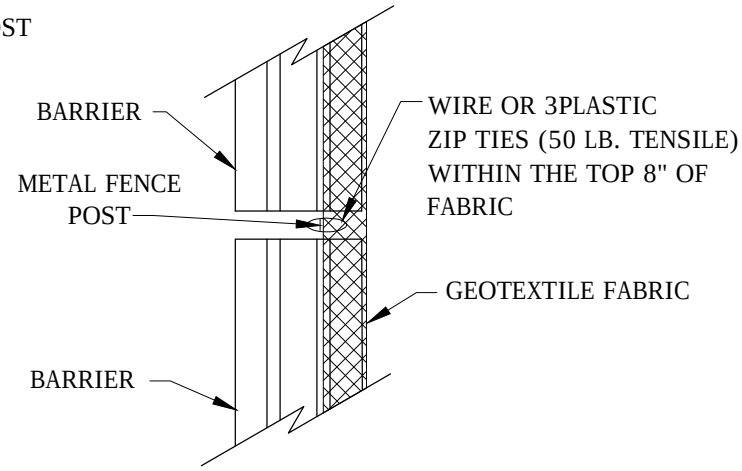

PLAN

BARRIER WITHOUT CABLE RINGS

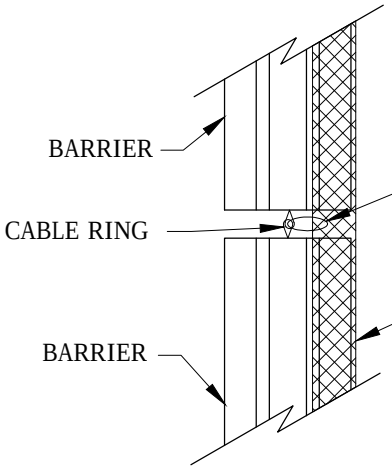

PLAN

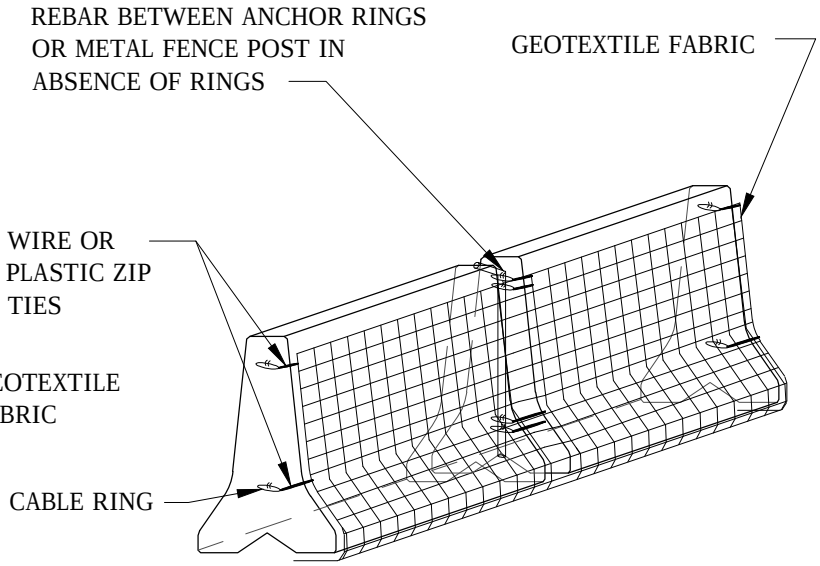

ISOMETRIC

BARRIER WITH CABLE RINGS,
SUPER DUTY SILT FENCE

Apple Valley

SUPER DUTY PERIMETER CONTROL
SILT FENCE / CONCRETE BARRIER SYSTEM

LAST REVISION:
JUNE 2009

PLATE NO.
ERO-3

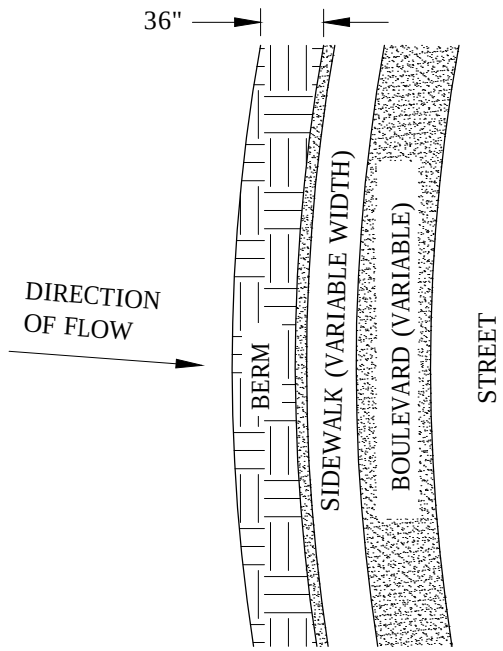

PLAN

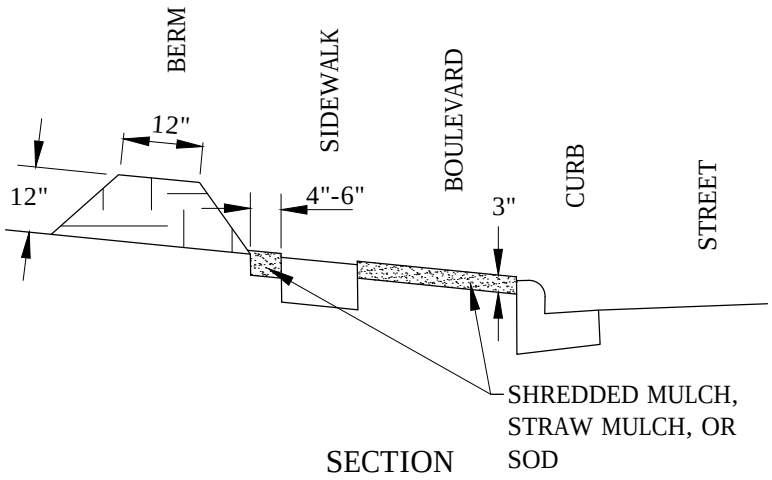

SECTION

BERM OR APPROVED EQUAL

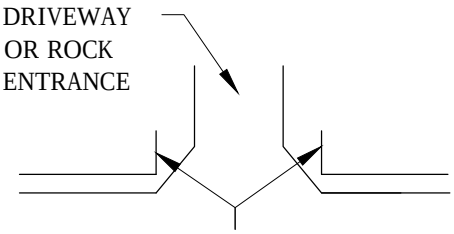

EXTEND SILT FENCE & SHREDDED MULCH, STRAW MULCH, SOD OR EQUAL TO PERIMETER OF ENTRANCE

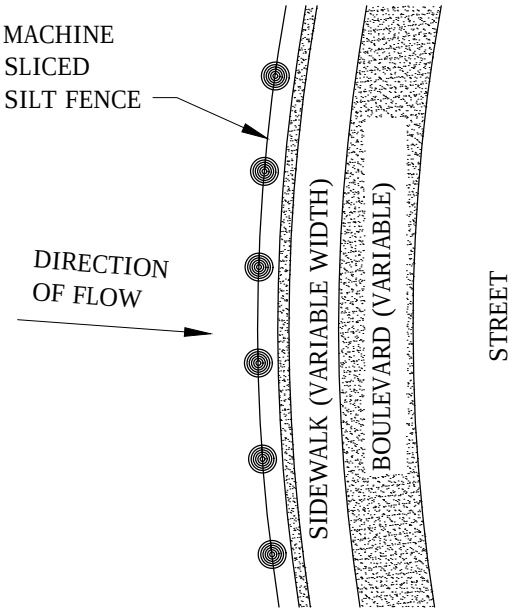

PLAN

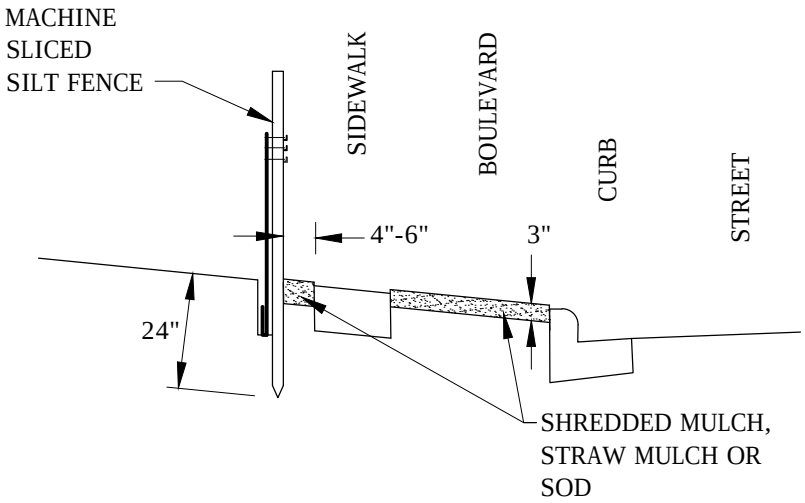

SECTION

SILT FENCE

Apple Valley

BACK OF CURB PERIMETER CONTROL WITH SIDEWALK

LAST REVISION:
JUNE 2009

PLATE NO.
ERO-4

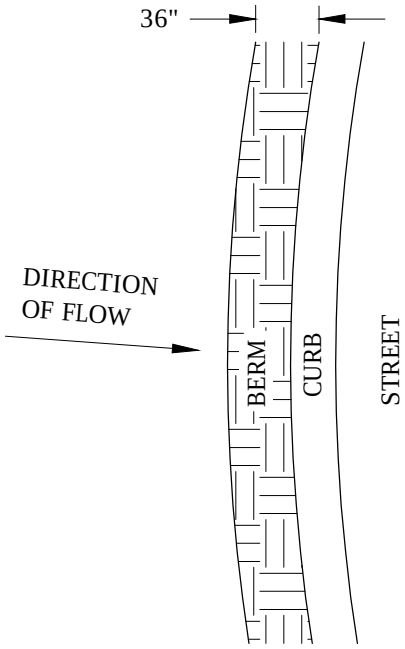

PLAN

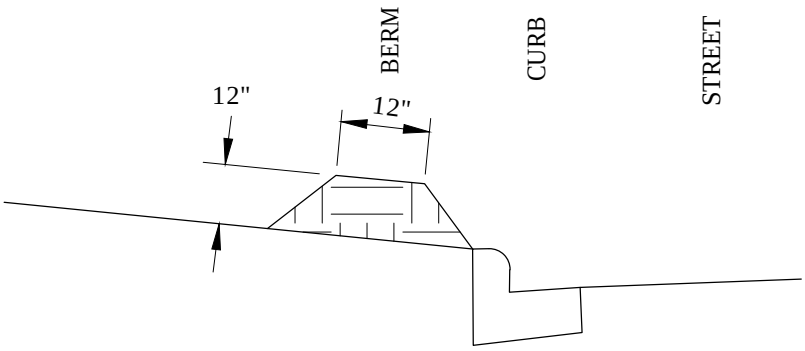

SECTION

BERM OR APPROVED EQUAL

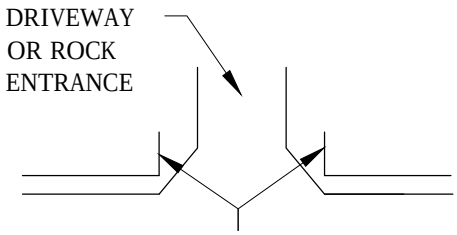

EXTEND SILT FENCE & SHREDDED MULCH, STRAW MULCH, SOD OR EQUAL TO PERIMETER OF ENTRANCE

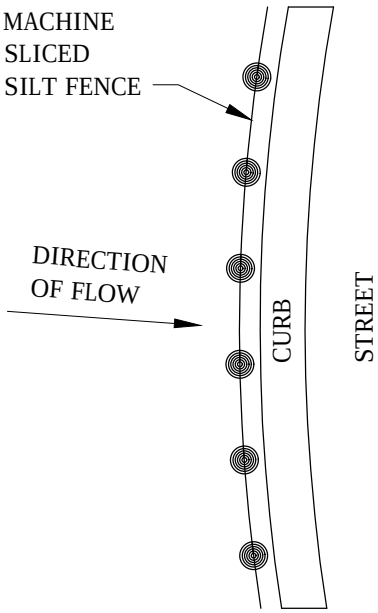

PLAN

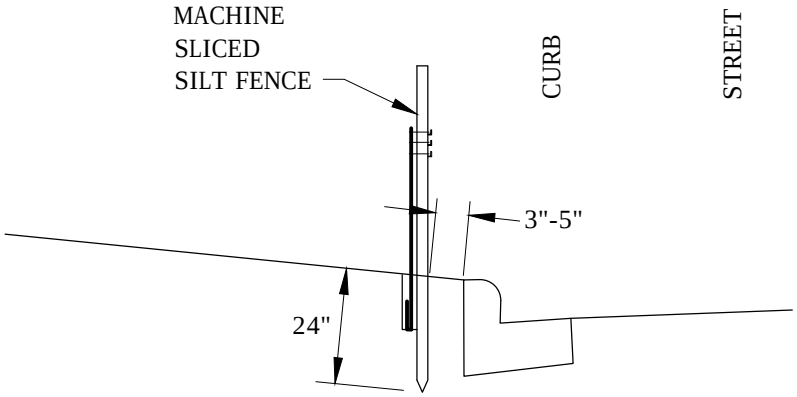

SECTION

SILT FENCE

Apple Valley

BACK OF CURB PERIMETER CONTROL
NO SIDEWALK

LAST REVISION:
JUNE 2009

PLATE NO.
ERO-5

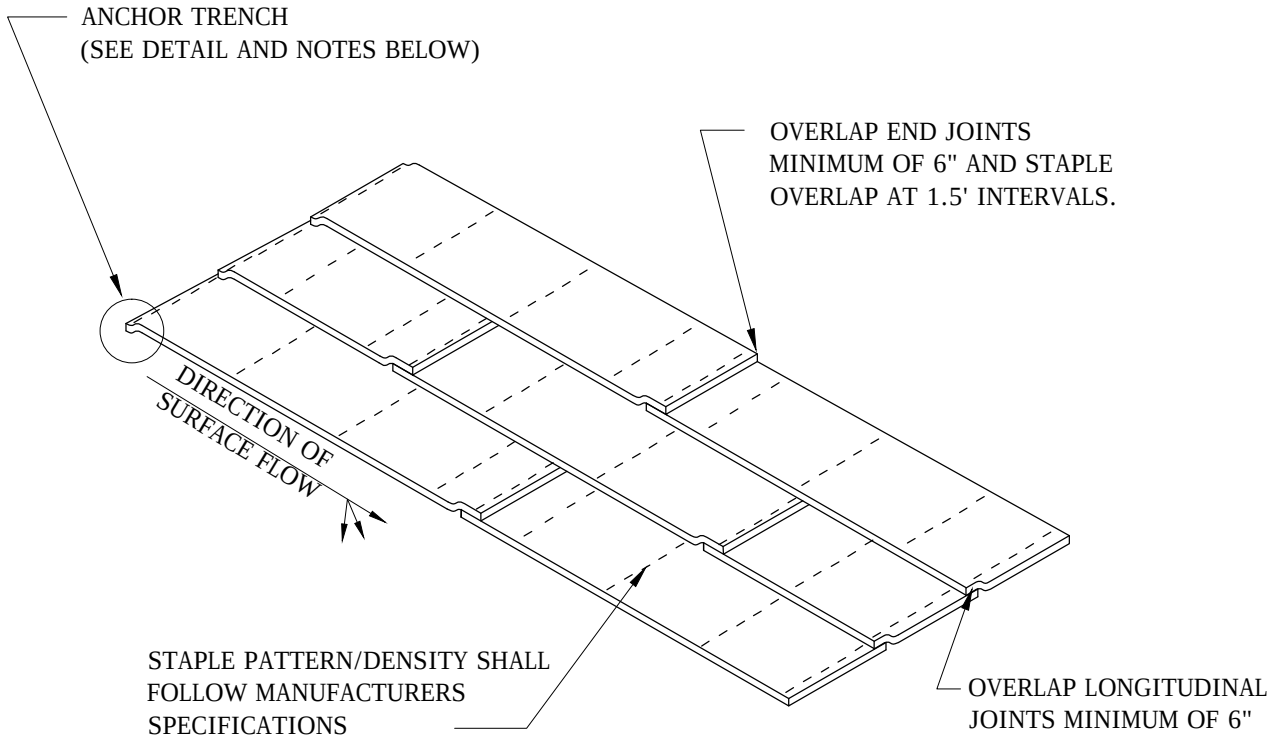

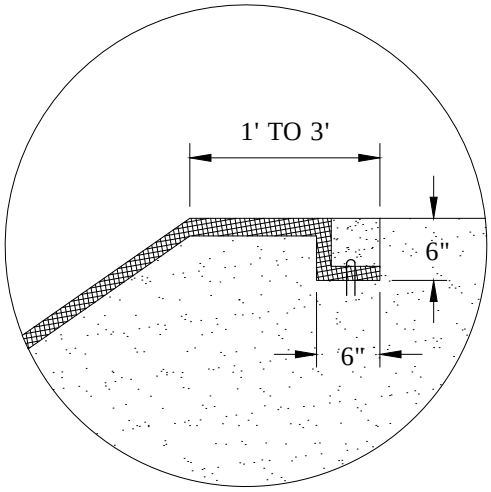

ANCHOR TRENCH

1. DIG 6" X 6" TRENCH
2. LAY BLANKET IN TRENCH
3. STAPLE AT 1.5' INTERVALS
4. BACKFILL WITH NATURAL SOIL AND COMPACT
5. BLANKET LENGTH SHALL NOT EXCEED 100' WITHOUT AN ANCHOR TRENCH

NOTE:

SLOPE SURFACE SHALL BE FREE OF ROCKS, SOIL CLUMPS, STICKS, VEHICLE IMPRINTS, AND GRASS. BLANKETS SHALL HAVE GOOD SOIL CONTACT.

Apple Valley

EROSION CONTROL BLANKET INSTALLATION

LAST REVISION:
JUNE 2009

PLATE NO.
ERO-6

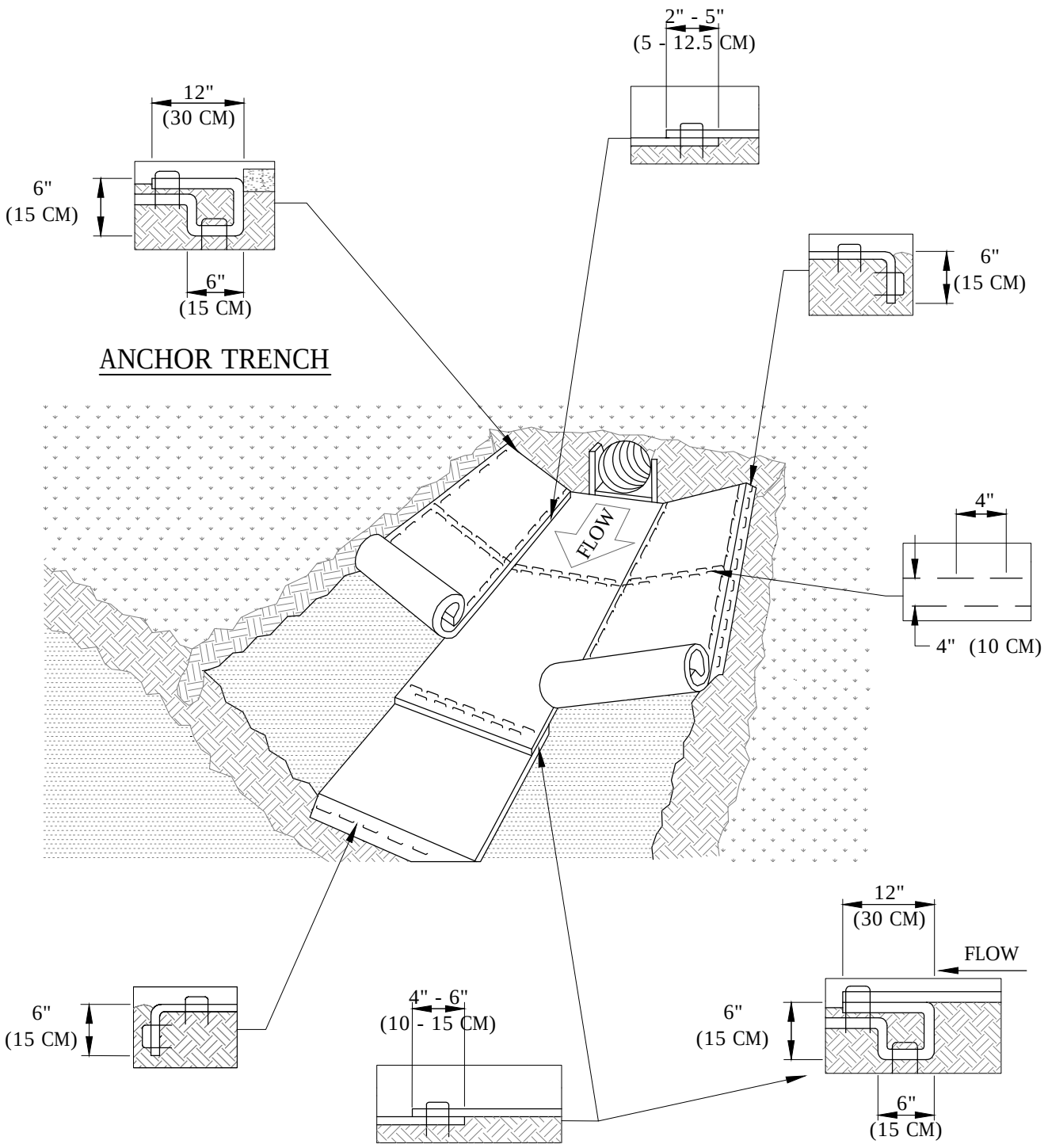

NOTE: INSTALL 3.5 STAPLES /SY, EXCEPT @ 1'
CENTERS IN CHECK SLOT & ANCHOR TRENCH

(PER SPECIFICATION)

Apple Valley

EROSION CONTROL BLANKET
CHANNEL INSTALLATION

LAST REVISION:
OCT 2009

PLATE NO.
ERO-7

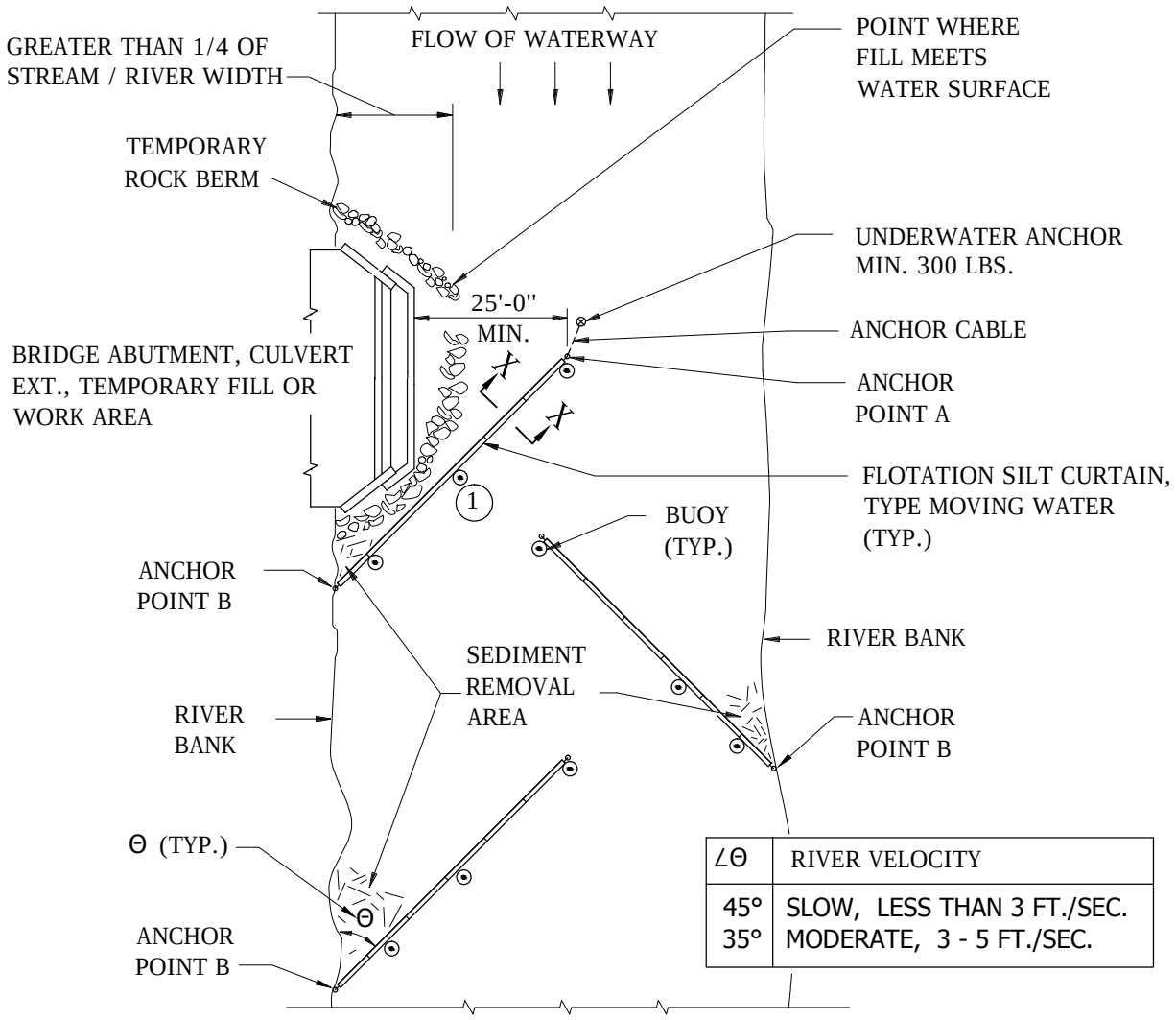

∠Θ	RIVER VELOCITY
45°	SLOW, LESS THAN 3 FT./SEC.
35°	MODERATE, 3 - 5 FT./SEC.

PLAN VIEW

NOTE:
(1) 100 FT. MAX. SPACING BETWEEN ANCHORS.
ANCHOR WEIGHT-MIN. 40 LBS.

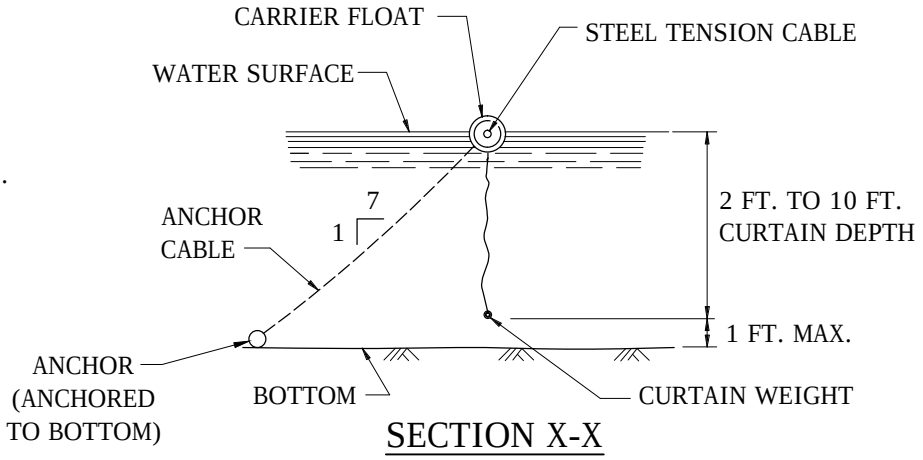

SECTION X-X

Apple Valley

FLOATING SILT CURTAIN
MOVING WATER TYPE

LAST REVISION:
JUNE 2009

PLATE NO.
ERO-8

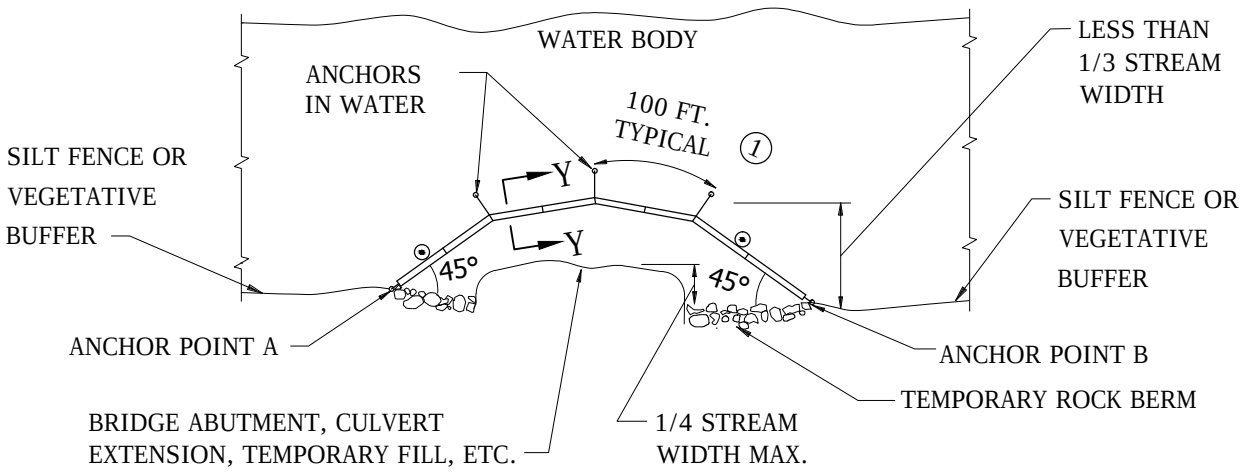

PLAN VIEW (WORK AREA)

NOTES:

1 -100 FT. MAX. SPACING BETWEEN ANCHORS.
-ANCHOR WEIGHT - MIN. 40 LBS.

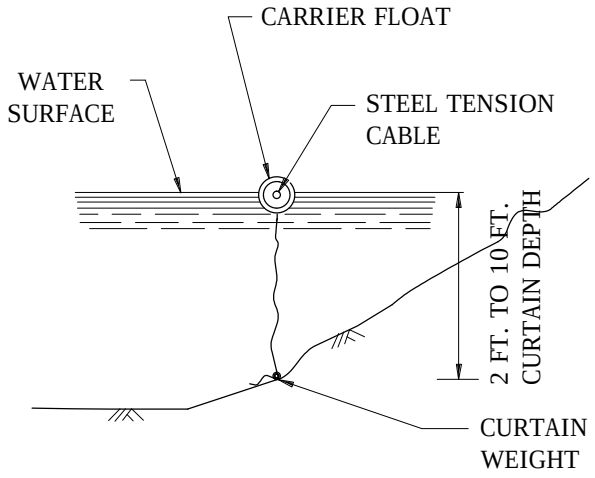

SECTION Y-Y

Apple Valley

FLOATING SILT CURTAIN
STILL WATER

LAST REVISION:
JUNE 2009

PLATE NO.
ERO-9